INSTRUCTION MANUAL

AL-356
Centre Lathe (240V)
356 x 1000mm Turning Capacity - 51mm Bore

L564D

CONTENTS

Preface……1
1. Safety rules for lathes……1
2. Machine specification……2
3. Constructional indication……3
4. Unpacking and installation……4
   4-1 Unpacking……4
   4-2 Cleaning……4
   4-3 Installation……4
5. Lubarication……4
   5-1 Headstock……4
   5-2 Gearbox……4
   5-3 Apron……4
   5-4 Change gears……4
   5-5 Others parts……4
6. Test running……5
   6-1 Operation Symbols……5
   6-2 Spindle speed control……6
7. Thread and feed selection……7
   7-1 Thread and feed selection……7
   7-2 Feed and thread tables……7
   7-3 Threading dial indicator……8
8. Electric circuit control……10
9. Chucks and chuck mounting……10
10. Maintenance and servicing……11
   10-1 Lathe alignmenat……11
   10-2 Saddle strip……11
   10-3 Cross slide……11
   10-4 Compound rest……12
   10-5 Cross slide nut……12
   10-6 Tailstock bed clamp……12
11. Bed Assembly……13
12. Headstock assembly……22
13. Gear box control……29
14. Apron……36
15. Cross slide & compound……39
16. Tailstock Assembly……47
17. Center rest & follow rest……49
18. Coolant system & work light……51
19. Electric assembly……53
20. Optional accessories……55

MACHINERY HOUSE

PREFACE

For an efficient and appropriate way of utilization, also for extending the machine's life, all the operators are requested to carefully read the instruction of this Manual before start to operate.

Most of the operators think, according to their own experience, they can handle the machine appropriately and hopeful to neglect what so important items in this booklet. Anyhow, we may say, as per previous experiencing, that many of the breakdowns are resulted from ignoring the instructions of the Manual. Although you have our one-year's warranty for the damage caused by the defect of the machine, either in material of functional, we will not take any responsibility for any damages arise out of improper operation.

In the mean time, besides specification, operator should also thoroughly and deeply acknowledge the character, function and maintenance of this machine before starting.

Generally, in addition to the description stated in coming chapter, you are requested to notice the following points:

1. never install the machine in the place where the sun shines directly or where the radiation of heat can reach for avoiding from affecting the accuracy of the machine.
2. use only the recommended lubrication oil.
3. clean the machine every time when finish working, or a cover will be a plus to prevent the dust.
4. try to get rid of chips or dusts especially in the grooves of the machine. Keep it as clean as possible or it may be scratched.
5. whenever the grooves of the machine damaged by falling in extra articles, don't ever try to move Apron. It needs to be repaired to resume its work.

Hope this operation Manual can be of great assistance and provide you more convenience when operating. The content of this Manual is the best solution derived from our long terms of manufacturing and operating experience. We wish to service you always with an policy of upgrading quality and a conviction in pursuit of perfection.

MACHINERY HOUSE

1. safety rules for lathes

safety is a combination of operator common sense and alertness at all times when lathe is being used. Study these safety rules and general safety rules before operating and retain for future use.

1. wear eye protection.
2. Never attempt any operation or adjustment if procedure is not understood.
3. keep fingers away from revolving parts and cutting tools while in operation.
4. Never force cutting action.
5. Never perform an abnormal or little used operation without study and use of adequate blocks, jigs stops, fixtures ECT.
6. Use of shop manual such as "machinery's handbook" or similar is recommended for cutting speeds feeds and operation detail.
7. Do not remove drive cover while machine is in operation. Make sure it is always closed.
8. Always remove chuck key, even when machine is not in operation.
9. Do not attempt to adjust or remove tools when in operation.
10. Always keep cutters sharp.
11. Never use in an explosive atmosphere or where a spark could ignite a fire.
12. Always use identical replacement parts when servicing.

WARNING: Do allow familiarity (gained from frequent use of your lathe) to become commonplace. A careless fraction of a second can allow for sever injury.

2. MACHINE SPECIFICATION

Bench lathe are especially suitable for machining, tool toms and repairing working shops to machine shafts, spindle, sleeves, and disc work piece of middle or small types. They can also be used to cut metric thread and imperial, and with compact construction and reasonable composition, they can cut very well. They are easy and reliable to operate, convenient to repair high in efficiency, and low noise.

Technical specification

Swing over bed	330mm	356mm
Swing over support	198mm	224mm
Swing over gap	450mm	476mm
Center height	166mm	179mm
Distance between centers	750mm/1000mm	1000mm
Bed width	187mm	187mm
Bed height	305mm	305mm
Motor output	1.5kw	1.5kw
Voltage	240V-415V	240V-415V
Spindle bore	51mm	51mm
Cam lock system	D5	D5
Spindle speed	70-1900rpm	70-1900rpm
Spindle taper	MT No.6	MT No.6
Cross slide travel	160mm	160mm
Compound slide travel	68mm	68mm
Leadscrew diameter	22mm	22mm
Feed rod diameter	19mm	19mm
Cutting tool (Max. section)	20×20㎜	20×20㎜
Imperial thread	2¼-40TPI	2¼-40TPI
Metric thread	0.45-10mm	0.45-10mm
Longitudinal feed	0.078-1.044mm	0.078-1.044mm
Cross-feed	0.022-0.298mm	0.022-0.298mm
Tailstock quill diameter & taper	42mm / MT No.4	42mm / MT No.4
Weights (Approx.)	620kg	650kg

MACHINERY HOUSE

3. constructional indication

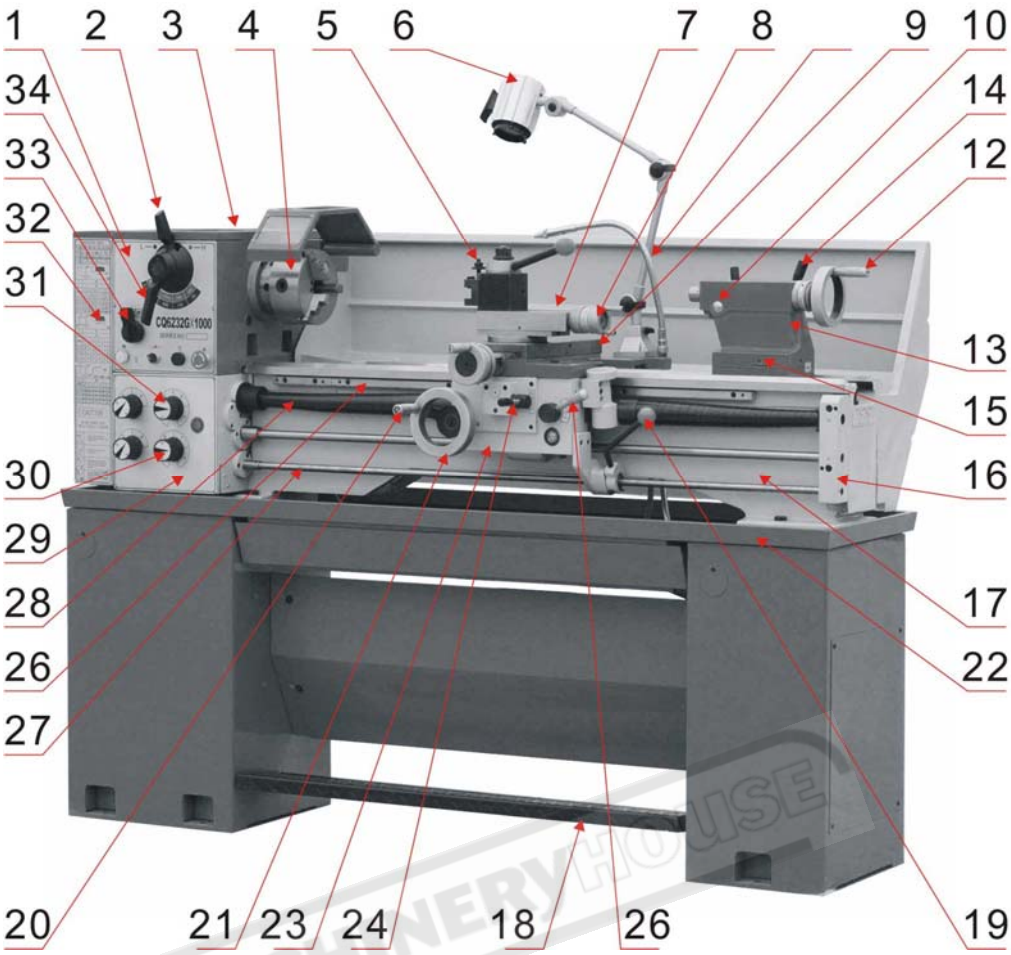

1. Headstock
2. Speed Selector
3. Eclectic Control Box
4. Spindle With Three-Jaw Chuck
5. Tool Post
6. Work Lamp
7. Compound Rest
8. Compound Rest Handle
9. Coolant
10, Cross Slide
11. Quill Clamp Body
12. Quill Travers Handle
13. Tailstock
14. Tailstock Clamp Lever
15. Tailstock Set-Over Screw
16. Support Body
17. Bed
18. Foot- Brake
19. Spindle Control Lever
20. Longitudinal Traverse-Hand wheel
21. Longitudinal Traverse Hand Lever
22. Chip Tray
23. Apron
24. Feed Axis Selector
25. Thread Cutting Engagement Lever
26. Rack
27. Control Rod
28. Lead screw
29. Gear Box
30. Feed Box Selector
31. Feed Box Selector
32. Gear Box Cover
33. Feed Direction Selector
34. Speed Selector Lever

4. UNPACKING AND INSTALLATION

4-1. Unpacking

Unload the machine with a tackle, using clamping plates and eyebolts. Keep the machine in balance by moving the tailstock and the bed slide to the right. Avoid using sling chains as they could damage to feed rod and leadscrew. Lift the lathe carefully and place it softly into the floor or workbench.

4-2 Cleaning

Before taking the machine into operation, using kerosene (paraffin) or white spirit to remove the anti-corrosive coating or grease from all slideways and gear train. Don't use lacquer thinner or other caustic solvents. Oil all bright machine surfaces immediately after cleaning. Use heavy oil or grease on the changes gears.

4-2. Installation

Place the lathe on a solid foundation. A concrete floor is the best base for the machine. (if necessary, use an under frame operational). Make sure there is sufficient area around the lathe for easy work and maintenance. Use a precision level on the bedways to make further adjustment for level condition, the tighten the foundation bolts evenly and finally recheck for level condition.

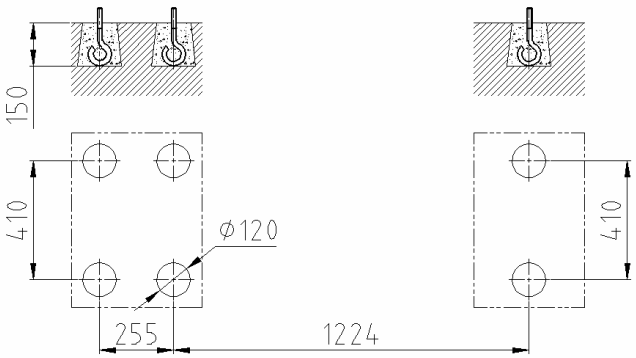

5. LUBRICATION

Before putting the lathe into operation, make the following lubrication check.

5-1. Headstock

The bearing of the headstock turns in an oil bath. Ensure that the oil level reaches three quarters of the quarters of the oil gauge glass.

For exchanging the oil, remove the end cover and the change gears with swing frame. Drain off the oil by removing the drain plug on the bottom of the headstock. To fill, take off the headstock cover.

Check the oil level regularly. The first oil change should be made after 3 month, then change it once a year.

5-2. Gearbox

Remove the end cover to expose the filling plug. Through it the shell tellus 32 is filled to the oil level in the oil gauge glass regularly. The first oil change should be made after three months, the change it once a year.

5-3. Apron

The oil bath is filled with shell tellus 32 through the filling plug on the right side of the apron. Check the oil level in the oil gauge glass on the front regular. The first oil change should be made after three months, then change it once a year.

For exchanging the oil, drain away oil by taking off the drain plug on the bottom of the apron.

5-4. Change gears

Lubricate the change gears with thick machine oil or grease once a month.

5-5. Other parts

There are other lubricating points on the input shaft bracket of the gearbox, the handwheel on the apron, the longitudinal and cross slide, the thread dial indicator, the tailstock and the bracket, use the grease gun to put a few drops of oil from time to time. Lubricate the apron worm and worm gear, half nut and leadscrew twice a month. Apply a light oil film to the bed way and all other bright parts like the tailstock quill, feed rod ECT. Once a day.

MACHINERYHOUSE

6. TEST RUNNING

6-1. Operation symbols

Red Green	Power Green: on Red: off	Red Green	Coolant Green: on Red: off
	Half nut opened		Half nut closed
mm	Metric thread	1"	Imperial thread
		Right-hand thread and longitudinal feed toward the headstock side (left figure)	
		Left-hand thread and longitudinal feed toward the headstock side (right figure)	
	Longitudinal feed engaged (upward). Both Longitudinal feed disengaged (central). Cross feed engaged (downward)	Oil inlet	Oil inlet (hole)
			Don't change speed while is running
	Electrical control (Danger)		JOG
	Pilot Lamp		STOP

MACHINERY HOUSE

6-2. Spindle speed control

A. Identification before operation

Ensure that lubrication has been carried out as described before.

When the main spindle is rotating, the gearbox and feed axis of the bedsides are put into operation. The forward/reverse switch (21) should be on neutral. The feed axis selector (26) and feed / thread selector handle (22) are in disengaged position. Under these circumstances, both the longitudinal traverse handwheel and cross traverse handle (27) can be operated by hand.

B. Main spindle rotation

The main spindle rotation is selected by forward / reverse switch.

C. Main spindle speed

The speed of the main spindle is selecting by (high / low). Speed selector (3) and 4 steps speed selector (2). For both high and low speed, there are 4 different positions. For correct speed, please refer to the speed chart. When selector (3) is on “high”, we can get the four speeds, according to the graph.

Never change the speed before the motor has stopped completely!

Adjustment the speed can be assisted by turn the main spindle by hand.

D. Running-in

Running in should be done at lowest possible spindle speed. Let the machine to run at lowest speed for about twenty minutes, and then check for irregularities. If everything seems in order, gradually increase the speed.

E. Operation

Use only high peripheral speed type chucks.

The maximum spindle speed for chuck plate of 254mm diameter should not be more than 1255rpm. When thread cutting or auto feeding are not in use, the feed/thread selector should be in neutral position, so as to ensure disengagement of the leadscrew and the feed rod. To avoid unnecessary wear, the thread dial indicator should be out of mesh with the leadscrew.

MACHINERY HOUSE

7. THREAD AND FEED SELECTION

7-1. Thread and feed selection

All threads and feeds are indicated on the tables fitted on the front and top of the gearbox. They are selected with the feed selector handle on the gearbox.

A. Manual operation

The carriage is moved by the handle wheel (28), the cross slide by handle wheel (27) and the compound rest by handle wheel (10). The slide can anchor by turning the lock bolts on the top and the slide of the slide.

B. Feed and thread tables

Longitudinal and cross feed table. Metric and imperial thread table.

C. Automatic feed operation

Firstly, engage the 40T change gear at the transmission shaft and the 127T intermediate gear with feed direction selector (38), next, set the feed/thread selector (34), To the left hand position and position one lever (33) at any of the 1-8 hole, the other at any of A-E holes, thus the feed rod will rotate. If selector (26) is pushed upward, a longitudinal feed can be obtained. If pushing downward, across feed will be obtained.

D. Thread cutting operation

The direction of thread cutting is controlling by feed director (38). By operation feed selector handle and feed / thread selector handle (34) according to thread pitch, the leadscrew rotate. Operate downward the thread cutting engagement lever (22), it should be engaged with leadscrew, thus the longitudinal travel of thread cutting feed.

7-2. Feed and thread tables

(A). Feed table:

Longitudinal and cross feed table for metric lathe

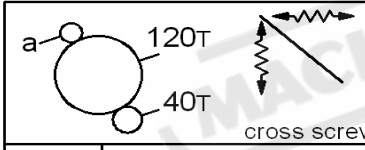

cross screw: 2.5mm

a		30T			
LEVER		0T	0S	0R	0U
A	D	1.044 / 0.298	0.975 / 0.278	0.783 / 0.224	0.627 / 0.179
B	D	0.522 / 0.149	0.487 / 0.139	0.392 / 0.112	0.313 / 0.089
A	C	0.261 / 0.075	0.244 / 0.070	0.196 / 0.056	0.157 / 0.045
B	C	0.131 / 0.037	0.122 / 0.035	0.098 / 0.028	0.078 / 0.022

Longitudinal and cross feed table for imperial leadscrew

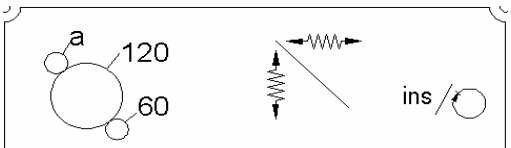

Cross screw threads:10TPI

a		60T				30T			
LEVER		T	S	R	U	T	S	R	U
A	D	0.0159 / 0.0098	0.0148 / 0.0092	0.0119 / 0.0074	0.0095 / 0.0059	0.0080 / 0.0049	0.0074 / 0.0046	0.0060 / 0.0037	0.0048 / 0.0030
B	D	0.0080 / 0.0049	0.0074 / 0.0046	0.0060 / 0.0037	0.0048 / 0.0030	0.0040 / 0.0025	0.0037 / 0.0023	0.0030 / 0.0019	0.0024 / 0.0015
A	C	0.0040 / 0.0025	0.0037 / 0.0023	0.0030 / 0.0019	0.0024 / 0.0015	0.0020 / 0.0012	0.0019 / 0.0012	0.0015 / 0.0009	0.0012 / 0.0007
B	C	0.0020 / 0.0012	0.0019 / 0.0012	0.0015 / 0.0009	0.0012 / 0.0007	0.0010 / 0.0006	0.0009 / 0.0006	0.0007 / 0.0004	0.0006 / 0.0003

MACHINERYHOUSE

(B) Thread tables

Thread table for metric leadscrew

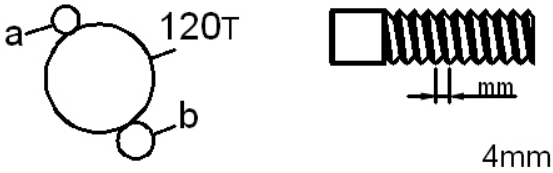

a		30T							
b		40T							
LEVER		4	1	4	2	3	1	3	3
		T	T	R	S	S	U	R	U
A	D	10	8.0	7.5	6.0	5.6	4.8	4.5	3.6
B	D	5.0	4.0	3.75	3.0	2.8	2.4	2.25	1.8
A	C	2.5	2.0	1.875	1.5	1.4	1.2	1.125	0.9
B	C	1.25	1.0	0.9735	0.75	0.7	0.6	0.5625	0.45

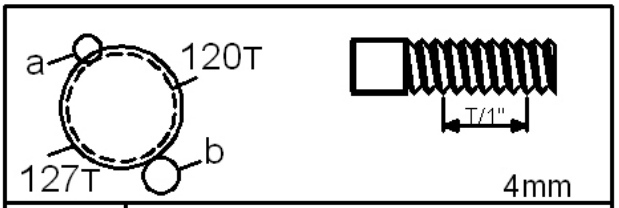

a		40T				
b		40T				
LEVER		1	2	1	3	3
		T	S	U	R	U
A	D	2¼	3	3¾	4	5
B	D	4½	6	7½	8	10
A	C	9	12	15	16	20
B	C	18	24	30	32	40

Thread table for imperial leadscrew

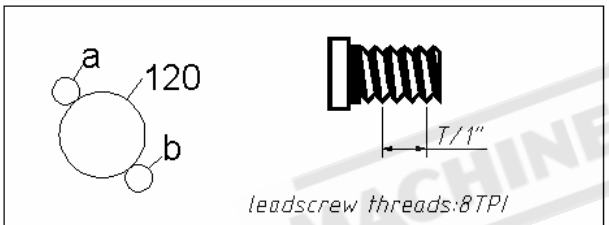

a		60	60	60	60	40	40	30	40	60
b		60	54	57	60	44	46	60	52	63
LEVER		R	U	U	U	U	U	T	U	U
		1	1	1	1	1	1	1	1	3
A	D	4	4½		5	5½		6	6½	7
B	D	8	9	9½	10	11	11½	12	13	14
A	C	16	18	19	20	22	23	24	26	28
B	C	32	36	38	40	44	46	48	52	56

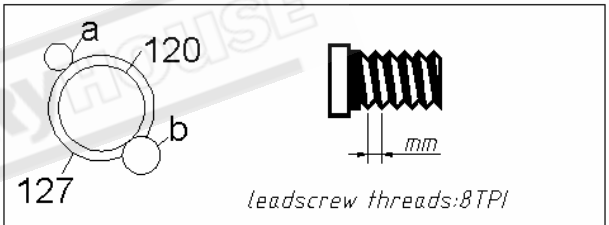

a		56	60	60	30	60	60	30	60	42
b		60	60	60	60	60	60	60	60	63
LEVER		R	U	S	T	U	R	T	U	U
		4	4	3	4	1	3	1	3	1
A	D	7.0	6.0		5.0		4.5	4.0		
B	D	3.5	3.0		2.5		2.25	2.0	1.8	1.6
A	C	1.75	1.5	1.4	1.25	1.2		1.0	0.9	0.8
B	C		0.75	0.7		0.6		0.5	0.45	0.4

MACHINERY HOUSE

7-3. Thread cutting operation

In order to obtain the desired thread, all correct change gears must be installed in strict accordance with the chart, failure to do so will give incorrect threads.

Rotate the leadscrew by operating the feed/thread selector to any position and be sure the feed selector handle is engaged. Operate downward the thread cutting engagement lever (25), and it will be engaged with the leadscrew to obtain the longitudinal travel of carriage, namely, the thread cutting feed. Make sure the feed axis selector is disengaged (at neutral position) before operating the thread cutting engagement lever (25) since there is an interlock mechanism between the auto feeding and thread cutting engagement.

Direction of thread cutting can be chosen by turning the feed directing selector (33) at the headstock. There are 31 Nos. of thread pitches each in Imperial, 26 Nos. of Metric pitches those which can be obtained by turning the feed selector handles.

(A).Thread dial indicator

The thread dial indicator is installed on the right hand side of the apron the indicator is used for thread cutting to engage with the leadscrew.

For minimum wear the thread dial indicator should be disengaged by swing the pinion out of mesh with the leadscrew when not in use.

For these threads it is recommended that the thread dial indicator be used this allows the half nut of leadscrew to be engaged at the end of each thread cutting pass, provided that they are re-engaged in accordance with the indicator table mounted on the left hand side of the apron.

IN column 1: millimeter pitches to be cut.

27T, 28T, 30T: The number of teeth in "pitch-off gear" arranged to mesh with the leadscrew (this being selected from the stack, stored on the bottom of the dial spindle)

Dial graduation:

The dial numbers at which the half nut may be engaged under numbers of teeth of pick- off gear.

Metric leadscrew machines (Metric thread only).the table shows:

INDICATOR TABLE

27T	mm	0.45	0.6	1.5	3.0	4.5	6.0
	scale	1 / 5 / 9					
28T	mm	0.7		3.5		8.0	
	scale	1 / 4 / 7 / 10				1 / 7	
30T	mm	1.25	2.5	5.0	10		
	scale	1 / 3 / 5 / 7 / 9 / 11					
0 T	mm	1.0		2.0		4.0	
	scale						

Imperial leadscrew machines (imperial thread only). The table shows:

INDICATOR TABLE

T.P.I	4	4½		5	5½	6	6½	7	8	9	9½	10
SCALE	1-4	1		1	1	1.3	1	1	1-8	1	1	1.3
T.P.I	11	11½	12	13	14	16	18	19	20	22	23	24
SCALE	1	1	1-4	1	1.3	1-8	1.3	1	1-4	1.3	1	1-8
T.P.I	26	28	32	36	38	40	44	46	48	52	56	
SCALE	1.3	1-4	1.3	1-4	1	1-4	1-4	1.3	1-8	1-4	1-8	

MACHINERY HOUSE

8. ELECTRIC CIRCUIT CONTROL

9.CHUCKS AND CHUCK MOUNTING

When fitting chucks or faceplates, first ensure that spindle and chuck tapers are be necessary when mounting a new chuck to re-set the cam lock studs (A). to do this, remove the cap-head locking screws (B) and set each stud so that the scribed ring (C) is flush with the rear face of the chuck-with the slot lining up with the locking screw hole.

Now mount the chuck or faceplate on the spindle nose and tighten the six cams in turn. When fully tightened, the cam lock line on each cam should be between the two V marks on the spindle nose.

If any of the cams do not tighten fully within these limit marks, remove the chuck or faceplate and re-adjust the stud as indicated in the illustration. Fit and tighten the locking screw (B) at each stud before remounting the chuck for work. A reference mark should be made on each correctly fitted chuck or faceplate to coincide with the reference mark scribed in the spindle nose.

This will assist subsequent remounting. Do not interchange chucks or faceplate between lathes without checking for correct cam locking.

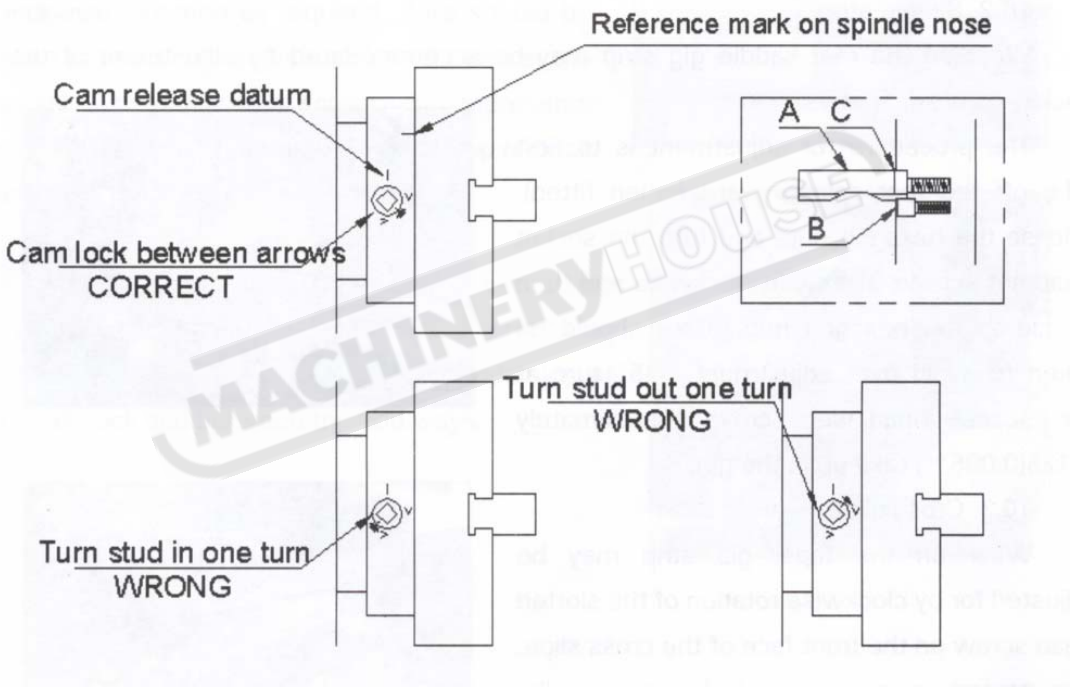

10.MAINTENANCES AND SERVICING

10-1. Lathe alignment

When the lathe is installed and ready for use, it is recommended to check the machine alignment before commencing work.

Alignment and leveling should be checked regularly to insure continued accuracy.

Adopt this procedure as follow: take a steel bar with a diameter of appr. 50mm and length of appr. 200mm. span it in the chuck without using the center. Then cut off a chip over a length of 150mm and measure the difference in A and B.

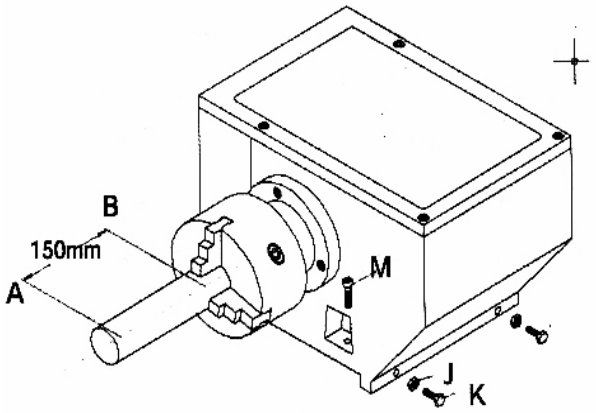

In order to correct a possible difference, loosen the screw (J) clamping the headstock on the bed. Adjust the headstock with setscrew (s). repeat the above procedure until all measuring is correct. The lathe will be cutting correctly.

10-2. Saddle strip

Wear on the rear saddle gig strip may be accommodated by adjustment of the socket head set screws.

The procedure for adjustment is to first take off the rear splash guard (when fitted), release the hexagon nuts and turn the socket head set screws slightly in clockwise and the re-clomp the hexagon nuts. Care should be taken to avoid over adjustment, α45°turn at the socket head set screw approximately 0.125(0.005”) take up in the gibe.

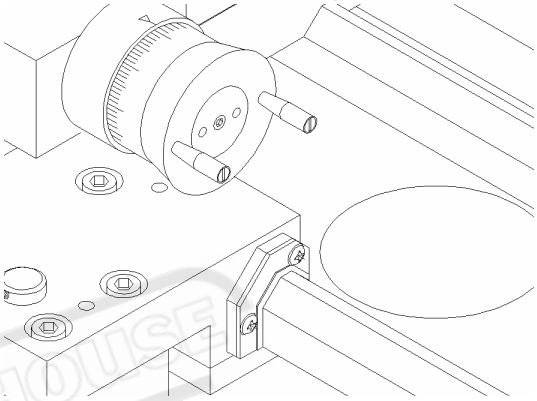

10-3. Cross slide

Wear on the taper-gibe strip may be adjusted for by clockwise rotation of the slotted head screw on the front face of the cross slide. The procedure is to first slacken the similar screw at the rear then retighten this after adjustment to clamp the gibe in its new position.

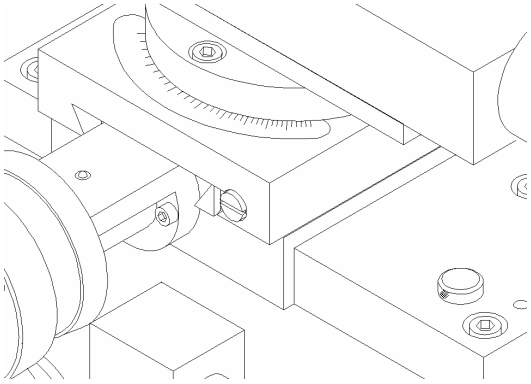

MACHINERY HOUSE

10-4. Compound rest

It is the same procedure as cross slide. To take up for wear on the compound rest taper gibe strip can adjust the slotted head screw on the tool post side of the compound rest by clockwise rotation. The procedure is to first slacken the similar screw at the opposite side then re-tighten this after adjustment to clamp the gibe in its new position.

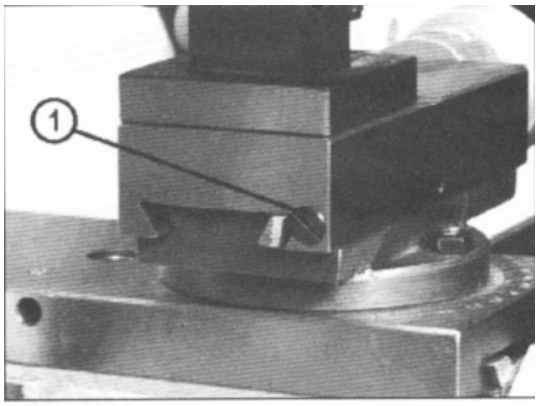

10-5. Cross slide nut

Provision is made for the elimination of backlash in the cross slide nut, the procedure for adjustment being as follows: take off the dust plate which is mounted on the rear face of saddle groove, turn the cross feed nut until it reaches the and edge of the feed rod. Turn the socket head cap screw in a clockwise direction as required. Care should be taken to avoid over adjustment, α45°turn at the socket head capscrew represents approximately 0.125(0.005”) take up of back lash.

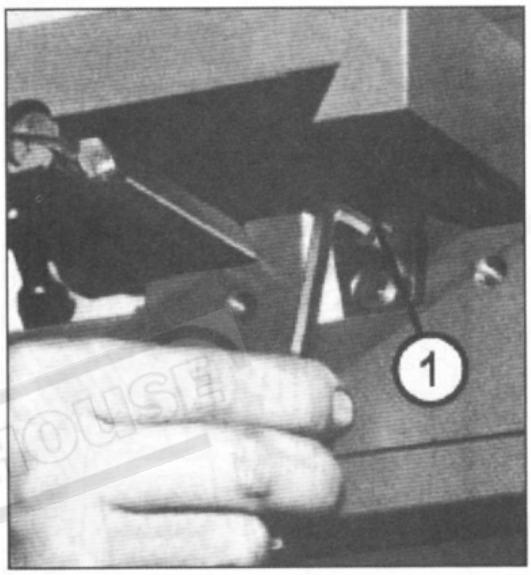

MACHINERY HOUSE

10-6. Tailstock bed clamp

The angular lock position of the bed clamp lever is adjusted by means of the self-locking hexagon headed bolt located on the underside of the tailstock and between the bed ways.

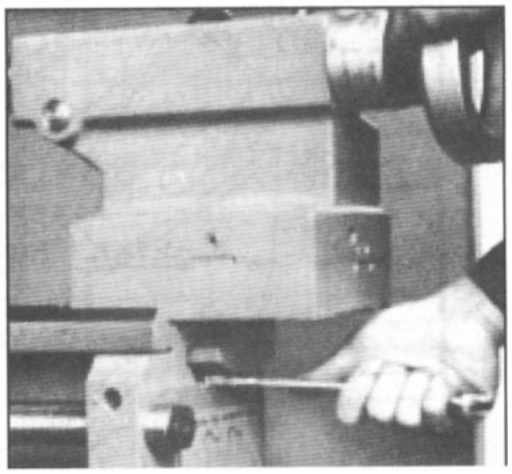

11.Bed Assembly(1/2)

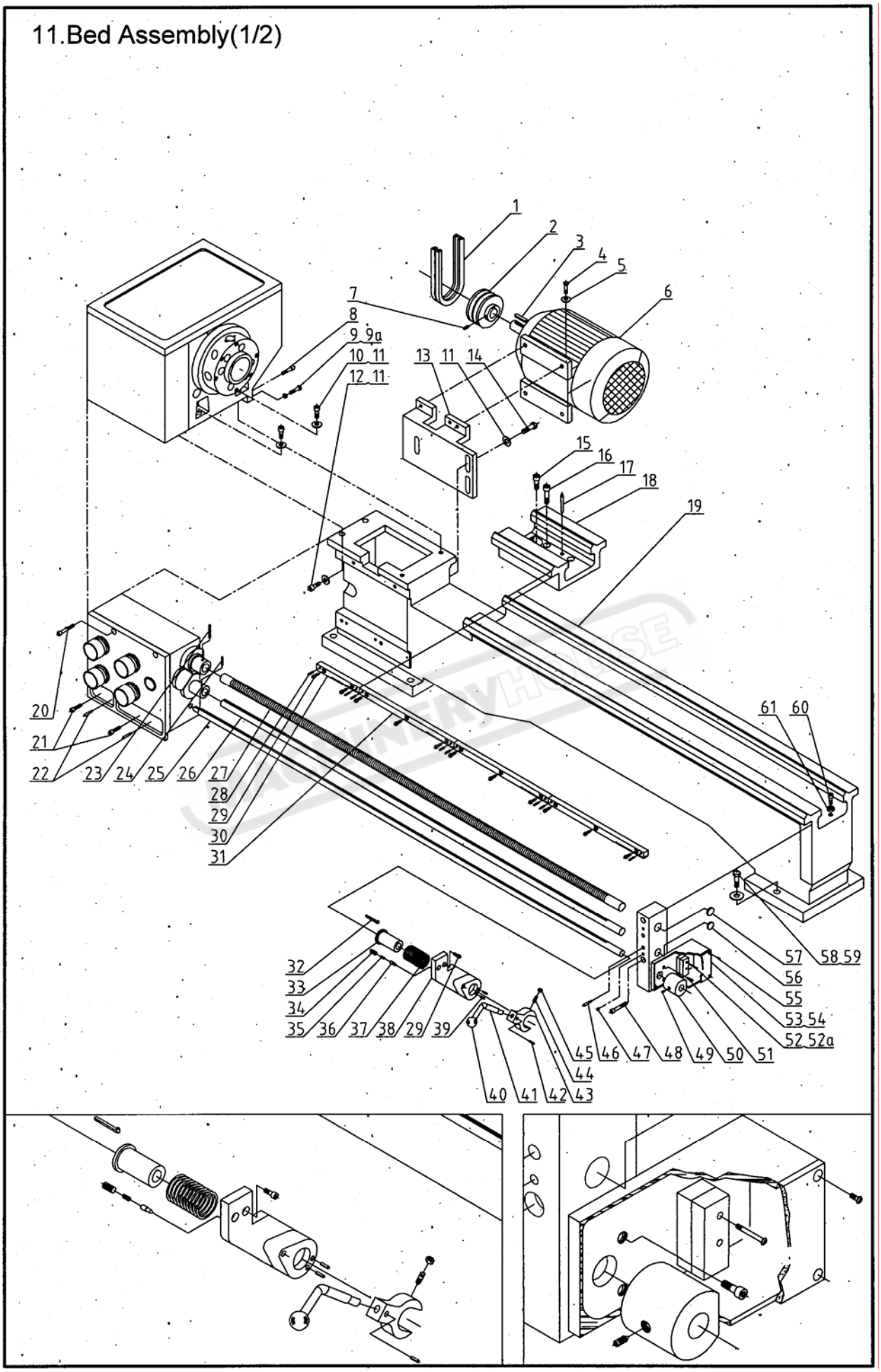

BED ASSEMBLY (1/2)

№	Part №	Name	Specification
1		V-Belt	□A838/□A850/□A864
2	D330A-11106	PULLEY	50Hz
	D330A-11106-1		60Hz
3	GB1096	KEY	8×35
4	GB5781	hexagon(al) head tap bolt	M8×25
5	GB97.1	washer	8
6		motor	240v/380v/400v-50Hz-1.5Kw
7	GB78	screw	M6×8
8	GB70	SOCKET HEAD SCREW	M8×30
9	GB5781	hexagon(al) head tap bolt	M8×40
9a	GB6170	NUT	M8
10	GB70	SOCKET HEAD SCREW	M12×35
11	GB97.1	washer	12
12	GB5781	hexagon(al) head tap bolt	M12×40
13	D330B-11107G	BRACKET	
14	GB5781	hexagon(al) head tap bolt	M10×30
15	GB70	SOCKET HEAD SCREW	M10×35
16	GB70	SOCKET HEAD SCREW	M12×40
17	GB881	assembling pin	8×70
18	D330B-11103G	BRIDGE	
19	D330B-11101G	BED	
20	GB70	SOCKET HEAD SCREW	M8×50
21	GB70	SOCKET HEAD SCREW	M8×30
22	GB118	TAPER PIN	6×30
23	GB879	SPRING PIN	4×42
24	GB879	SPRING PIN	4×32
25	D330B-11203G	CONTROL ROD	
26	D330B-11202G	FEED ROD	
27	D330B-11201G	LEADSCREW	Tr22×4-7h
	D330B-11201G-1		Tr22×3.175-7h
28	GB879	SPRING PIN	5×20
29	GB70	SOCKET HEAD SCREW	M6×16
30	D330B-11205G	SHORT RACK	
31	D330B-11204G	LONG RACK	
32	GB1096	Oriented key	4×50
33	D330B-11217G	COLLAR	
34	GB77	SCREW	M8×8
35		spring	6×1×15
36	D330B-11105G-1	ASSEMBLING PIN	
37		SPRING	32×3.6×50
38	D330B-11105G	BRACKET	
39	GB879	SPRING PIN	5×20
40		knob	BM10×32

MACHINERY HOUSE

BED ASSEMBLY (1/2)

№	Part №	Name	Specification
41	D330B-11206G	LEVER	
42	GB879	SPRING PIN	4×20
43	D330B-11104G	BRACKET	
44	GB78	SCREW	M6×16
45	GB6170	NUT	M6
46	GB118	TAPER PIN	6×45
47	GB7940.4	OIL CUP	6
48	GB70	SOCKET HEAD SCREW	M8×60
49	GB78	SCREW	M8×12
50	D330C-3012C	PLECTRUM	
51	GB70	SOCKET HEAD SCREW	M8×16
52	GB818	SCREW	M4×42
53a		switch	
53	D330C-11301C	BOX	
54	D330C-11302C	COVER	
55	GB818	SCREW	M4×10
56	D330B-11210G-1	COVER	19
57	D330B-11210G-2	COVER	22
58	GB5781	HEXAGON HEAD TAP BOLT	M12×45
59	GB97.1	WASHER	12
60	GB70	SOCKET HEAD SCREW	M10×35
61	GB6170	NUT	M10

MACHINERY HOUSE

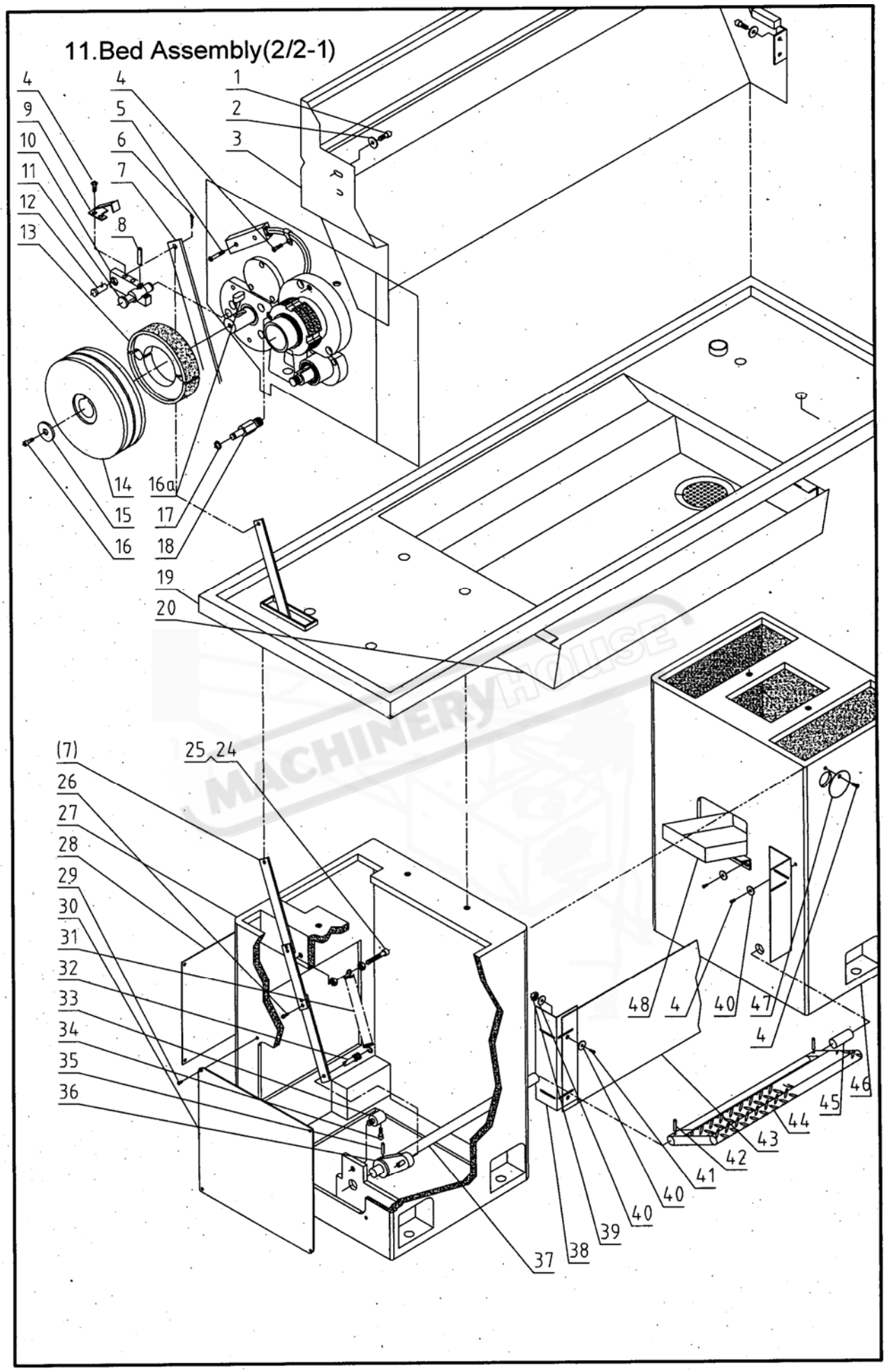
11.Bed Assembly(2/2-1)
4
9
10
11
12
13
4
5
6
7
8
1
2
3
14
15
16
16a
17
18
19
20
(7)
25
24
26
27
28
29
30
31
32
33
34
35
36
37
38
39
40
40
41
42
43
44
45
46
48
4
40
47
4

BED ASSEMBLY (2/2-1)

№	Part №	Name	Specification
1	GB70	Socket head screw	M6×12
2	GB97.1	Tailor-made washer	6
3	D330B-14205	Splash guard	
4	GB818	screw	M5×8
5	GB818	screw	M4×28
6	GB91	pin	3×16
7	D330B-14214	Connecting rod	
8	GB879	Spring pin	5×25
9	D330A-71205	backstop	
10	D330A-21231	rocker	
11	D330A-21230	shaft	
12	D330A-21239	pin	
13		Brake block	Φ105×25(XF-125)
14	D330A-21105	pulley	
15	GB97.1	washer	8
16	GB70	Socket head screw	M8×16
16a	GB1096	key	8×20
17	GB894.1	circlip	8
18	D330A-11232	shaft	
19	D330B-14203	Oil tray	
20	D330B-14204	Oil tray	
24	GB70	Socket head screw	M10×30
25	GB6170	Hexagon nut	M10
26	GB70	Socket head screw	M6×10
27	D330B-14201	Casting left stand	
28	D330B-14210	cover	
29	GB818	screw	M5×12
30	D330B-14209	cover	
31	D330A-11237	drawspring	
32	D330A-11236	pin	
33	D330A-11242	shaft	
34	GB70	Socket head screw	M6×40
35	GB879	Spring pin	5×40
36	D330A-11235	rocker	
37	D330A-11238	Long shaft	
38	D330B-14206	Angle iron	
39	GB6170	Hexagon nut	M6
40	GB97.1	Tailor-made washer	6

MACHINERY HOUSE

BED ASSEMBLY (2/2-1)

№	Part №	Name	Specification
41	GB70	Socket head screw	M6×12
42	GB879	SPRING PIN	5×28
43	D330B-14207	Baffle board	
44	D330B-14212	Brake pedal	
45	D330A-11241	Short shaft	
46	D330B-14202	Casting right stand	
47	D330B-14208	cover	
48	D330B-14213	funnel	

MACHINERY HOUSE

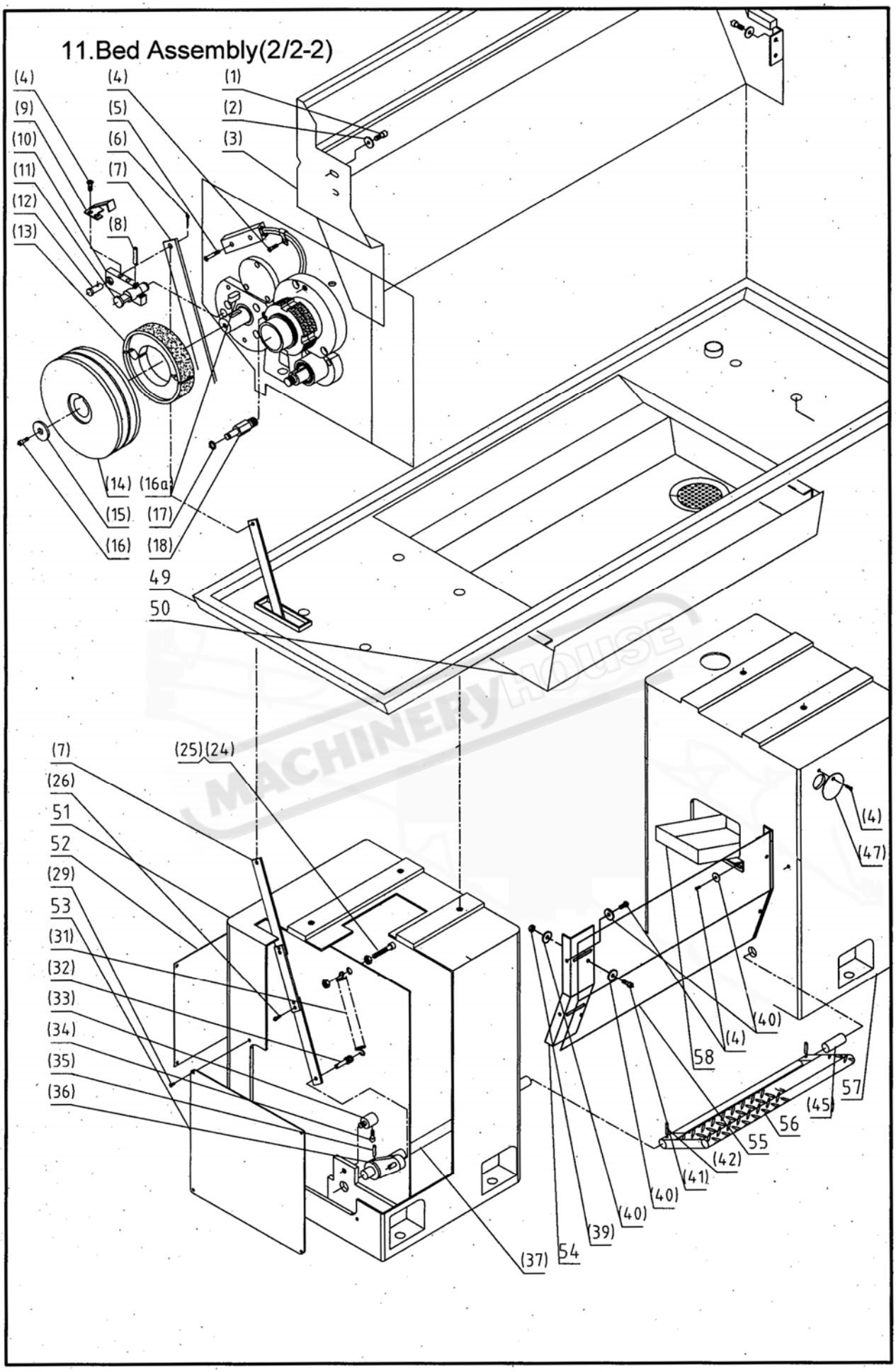
11.Bed Assembly(2/2-2)
(4)
(9)
(10)
(11)
(12)
(13)
(4)
(5)
(6)
(7)
(8)
(1)
(2)
(3)
(14)
(15)
(16)
(16a)
(17)
(18)
49
50
(7)
(26)
51
52
(29)
53
(31)
(32)
(33)
(34)
(35)
(36)
(25)(24)
(37)
54
(39)
(40)
(40)
(41)
(42)
55
56
(45)
57
58
(4)
(40)
(4)
(47)

BED ASSEMBLY (2/2-2)

№	Part №	Name	Specification
1	GB70	Socket head screw	M6×12
2	GB97.1	Tailor-made washer	6
3	D330B-14205	Splash guard	
4	GB818	screw	M5×8
5	GB818	screw	M4×28
6	GB91	pin	3×16
7	D330B-14214	Connecting rod	
8	GB879	Spring pin	5×25
9	D330A-71205	backstop	
10	D330A-21231	rocker	
11	D330A-21230	shaft	
12	D330A-21239	pin	
13		Brake block	Φ105×25(XF-125)
14	D330A-21105	pulley	
15	GB97.1	washer	8
16	GB70	Socket head screw	M8×16
16a	GB1096	key	8×20
17	GB894.1	circlip	8
18	D330A-11232	shaft	
24	GB70	Socket head screw	M10×30
25	GB6170	Hexagon nut	M10
26	GB70	Socket head screw	M6×10
29	GB818	screw	M5×12
31	D330A-11237	drawspring	
32	D330A-11236	pin	
33	D330A-11242	shaft	
34	GB70	Socket head screw	M6×40
35	GB879	Spring pin	5×40
36	D330A-11235	rocker	
37	D330A-11238	Long shaft	
39	GB6170	Hexagon nut	M6
40	GB97.1	Tailor-made washer	6
41	GB70	Socket head screw	M6×12
42	GB879	SPRING PIN	5×28
45	D330A-11241	Short shaft	
47	D330B-14208	cover	

MACHINERY HOUSE

BED ASSEMBLY (2/2-2)

№	Part №	Name	Specification
49	D330B-14203	Oil tray	
50	D330B-14204	Oil tray	
51	D330B-14201	Steel Left stand	
52	D330B-14210	Cover	
53	D330B-14209	Cover	
54	D330B-14206	Angle iron(left & right)	
55	D330B-14207	Baffle board	
56	D330B-14212	Brake pedal	
57	D330B-14202	Steel right stand	
58	D330B-14213	funnel	

MACHINERY HOUSE

12. Headstock Assembly(1/2)

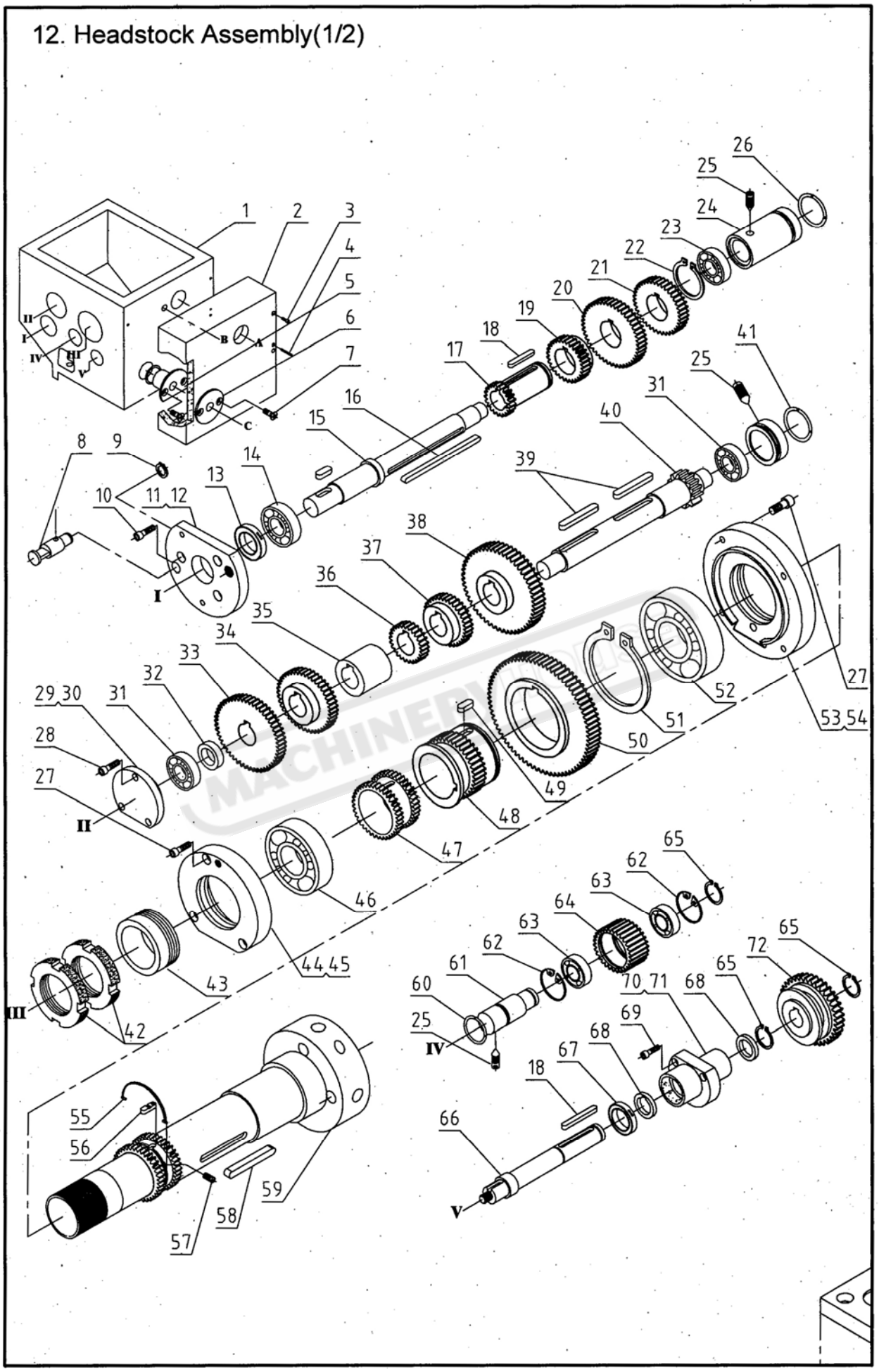

HEADSTOCK (1/2): PARTS LIST

№	Part №	Name	Specification
1	D330D-21107	headstock	
2	D330B-21113	Case frame	
3	GB70	Socket head screw	M6×40
4	GB879	Spring pin	5×40
5	D330A-21246	sleeve	
6	D330A-21235	sleeve	
7	GB819	screw	M4×8
(8)	D330A-11230	shaft	
9	GB894.1	circlip	12
10	GB70	Socket head screw	M6×20
11	D330A-21124	cover	
12	D330A-21601	gasket	
13	GB3871	Oil seal	SD25X40X7
14	GB276	Radial thrust bearing	6005/P5
15	D330A-21215	shaft	
16	GB1096	key	6×120
17	D330D-21217	gear	
18	GB1096	key	6×50
19	D330A-21218	gear	
20	D330D-21219	gear	
21	D330A-21220	gear	
22	GB894.1	circlip	35
23	GB276	Radial thrust bearing	6203
24	D330A-21106	Front plug	
25	GB78	screw	M8×16
26	GB1235	O-ring	40×3.1
27	GB70	Socket head screw	M6×25
28	GB70	Socket head screw	M4×12
29	D330A-21104	cover	
30	D330A-21602	gasket	
31	GB276	Radial thrust bearing	6204
32	D330A-21211	washer	
33	D330D-21222	gear	
34	D330A-21209	gear	
35	D330D-21221	washer	
36	D330D-21210	gear	
37	D330D-21223	gear	
38	D330D-21224	gear	
39	GB1096	key	8×55
40	D330A-21212	shaft	
41	GB1235	O-ring	47×3.1
42	D330D-21208	nut	
43	D330D-21102	collar	

MACHINERY HOUSE

HEADSTOCK (1/2): PARTS LIST

№	Part №	Name	Specification
44	D330D-21103	End cover	
45	D330D-21603	gasket	
46	GB297	Radial thrust bearing	32012/P5
47	D330D-21207	gear	
48	D330D-21227	gear	
49	GB1096	key	8×18
50	D330D-21226	gear	
51	GB894.1	circlip	90
52	GB297	Radial thrust bearing	32015/P5
53	D330D-21108	Front cover	
54	D330D-21605	gasket	
55	D330D-21252	Tailor-made ring spring	
56	D330D-21251	Tailor-made key	6×18
57	GB73	screw	M6×8
58	GB1096	key	8×85
59	D330D-21228	spindle	
60	GB1235	O-ring	25×2.4
61	D330A-21238	shaft	
62	GB893.1	circlip	42
63	GB276	Radial thrust bearing	16004
64	D330A-21237	gear	
65	GB894.1	circlip	20
66	D330B-21239G	shaft	
67	GB3871	Oil seal	24×32×5
68	D330A21202	washer	
69	GB70	Socket head screw	M5×16
70	D330A-21101	collar	
71	D330A-21604	gasket	
72	D330A-21201	gear	

MACHINERY HOUSE

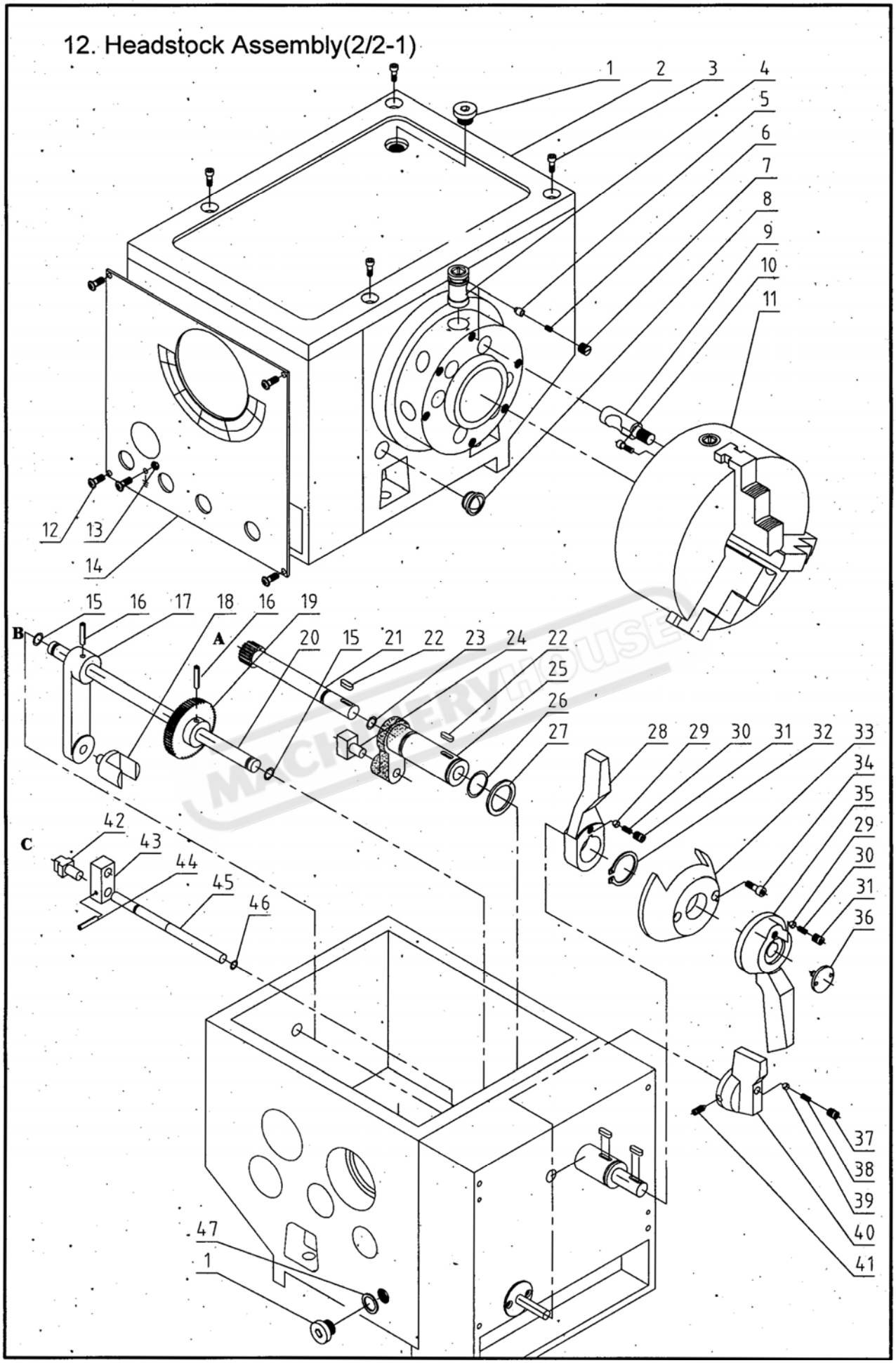
12. Headstock Assembly(2/2-1)
1
2
3
4
5
6
7
8
9
10
11
12
13
14
15
16
17
18
16
19
A
B
20
15
21
22
23
24
22
25
26
27
28
29
30
31
32
33
34
35
29
30
31
36
C
42
43
44
45
46
37
38
39
40
41
47
1

HEADSTOCK (2/2-1): PARTS LIST

№	Part №	Name	Specification
1		hexagonal socket head plug	M16×1.5
2	D330B-21112G	Cover board	
3	GB70	Socket head screw	M6×25
4	D330D-21231	cam	
5	D330D-21253	Arresting pin	
6	D330D-21254	spring	
7	D330D-21250	Screw bushing	
8	GB1160.1	Oil sight	A12
9	D330D-81201	Cam lock stud	
10	GB70	Socket head screw	M6×20
11		Three jaw chuck	D5/200
12	GB818	screw	M4×8
13	GB6170	nut	M4
14		nameplate	
15	GB1235	O-ring	14×2.4
16	GB879	Spring pin	5×30
17	D330A-21109	rocker	
18	D330D-21233	Shift fork	
19	D330A-21234	gear	
20	D330A-21232	shaft	
21	D330B-21241G	shaft	
22	GB1096	key	5×14
23	GB1235	O-ring	16×2.4
24	D330A-21403	Shift fork	
25	D330D-21121	Shift collar	
26	GB1235	O-ring	30×3.1
27	D330A-21240	washer	
28	D330B-21119G	handle	
29	GB308	Steel ball	6
30	GB2089	spring	Y1-6×1×10
31	GB77	screw	M8×8
32	GB894.1	Circlip	30
33	D330B-21118G	Handle base	
34	GB70	Socket head screw	M6×35
35	D330B-21117G	handle	
36	D330B-21117G-1	Adjusting screw	
37	GB77	screw	M6×8
38	GB2089	spring	Y1-5×1×25
39	GB308	Steel ball	5
40	D330B-21120G	handle	
41	GB78	screw	M6×16
42	D330A-21402	Shift fork	
43	D330A-21111	rocker	
44	GB879	Spring pin	4×18
45	D330B-21236G	shaft	
46	GB1235	O-ring	10×1.9
47		Copper washer	16

MACHINERY HOUSE

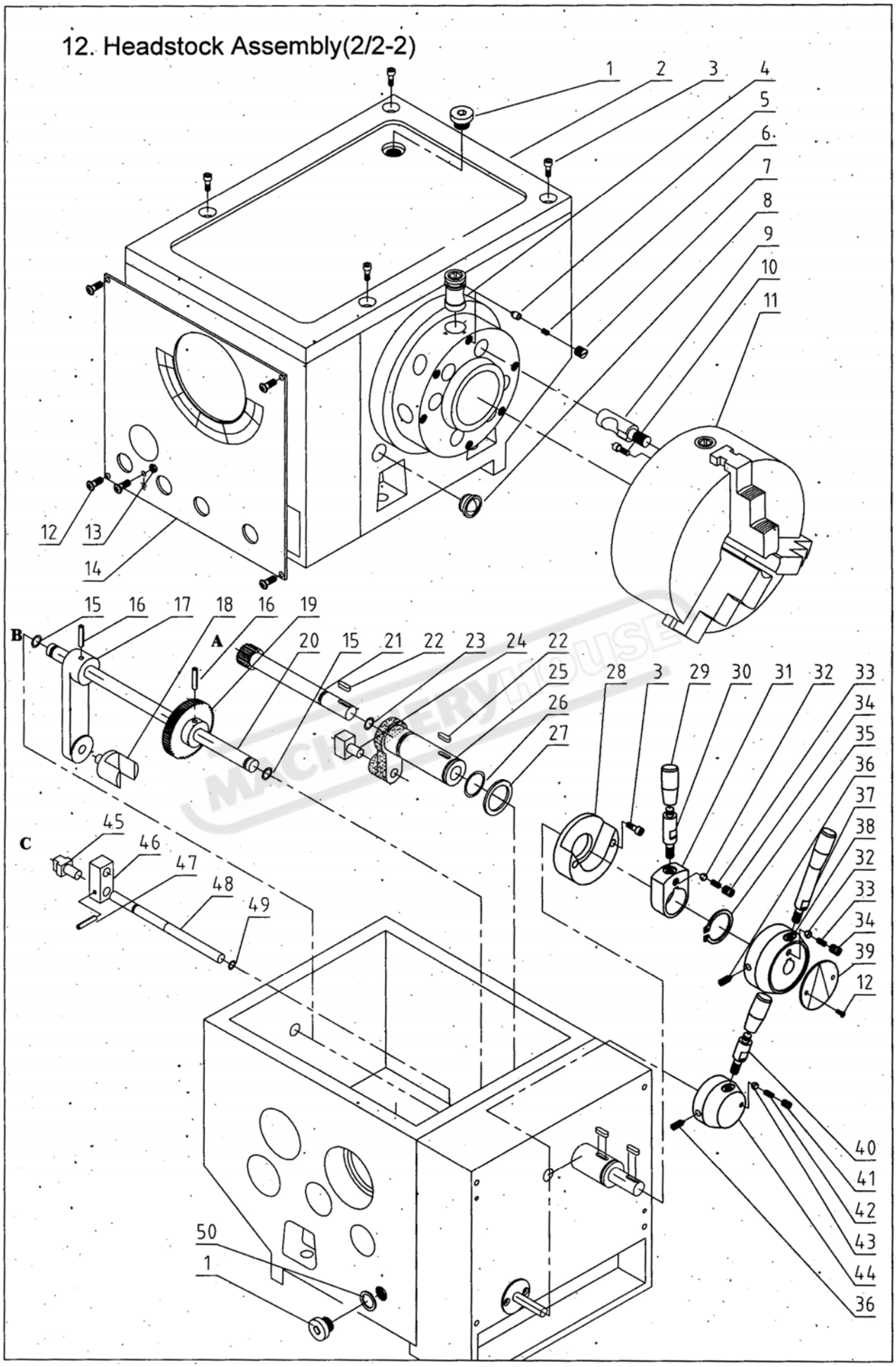
12. Headstock Assembly(2/2-2)
1
2
3
4
5
6
7
8
9
10
11
12
13
14
15
16
17
18
16
19
A
B
20
15
21
22
23
24
22
25
26
27
28
3
29
30
31
32
33
34
35
36
37
38
32
33
34
39
12
C
45
46
47
48
49
40
41
42
43
44
36
50
1

HEADSTOCK (2/2-2): PARTS LIST

№	Part №	Name	Specification
1		hexagonal socket head plug	M16×1.5
2	D330B-21112G	Cover board	
3	GB70	Socket head screw	M6×25
4	D330D-21231	cam	
5	D330D-21253	Arresting pin	
6	D330D-21254	spring	
7	D330D-21250	Screw bushing	
8	GB1160.1	Oil sight	A12
9	D330D-81201	Cam lock stud	
10	GB70	Socket head screw	M6×20
11		Three jaw chuck	D5/200
12	GB818	screw	M4×8
13	GB6170	nut	M4
14		nameplate	
15	GB1235	O-ring	14×2.4
16	GB879	Spring pin	5×30
17	D330A-21109	rocker	
18	D330D-21233	Shift fork	
19	D330A-21234	gear	
20	D330A-21232	shaft	
21	D330B-21241G	shaft	
22	GB1096	key	5×14
23	GB1235	O-ring	16×2.4
24	D330A-21403	Shift fork	
25	D330D-21121	Shift collar	
26	GB1235	O-ring	30×3.1
27	D330A-21240	washer	
28	D330A-21118	base	
29	GB7271.3	cover	BM8×40
30	D330A-21248-1	handle	
31	D330A-21119	Handle base	
32	GB308	Steel ball	6
33	GB2089	spring	Y1-6×1×10
34	GB77	screw	M8×8
35	GB894.1	Circlip	30
36	GB78	screw	M6×16
37	D330A-21249	Handle base	
38	D330A-21117	Handle base	
39		Position sign plate	
40	D330A-21248	handle	
41	GB77	screw	M6×8
42	GB2089	spring	Y1-5×1×25
43	GB308	Steel ball	5
44	D330A-21120	Handle base	
45	D330A-21402	Shift fork	
46	D330A-21111	rocker	
47	GB879	Spring pin	4×18
48	D330B-21236G	shaft	
49	GB1235	O-ring	10×1.9
50		Copper washer	16

MACHINERY HOUSE

13.Gear box Assembly(1/2)

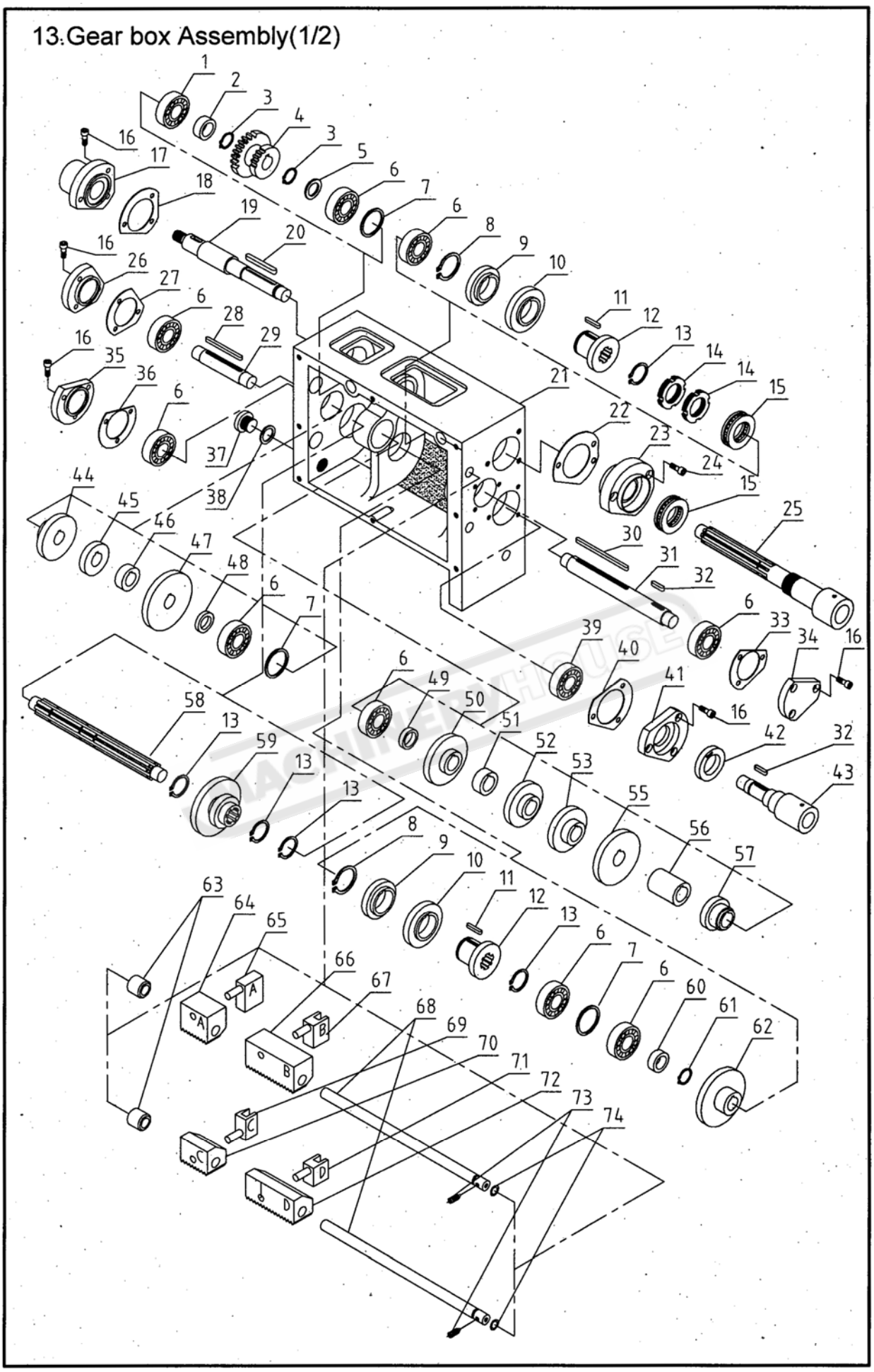

13.Gearbox Assembly(2/2)

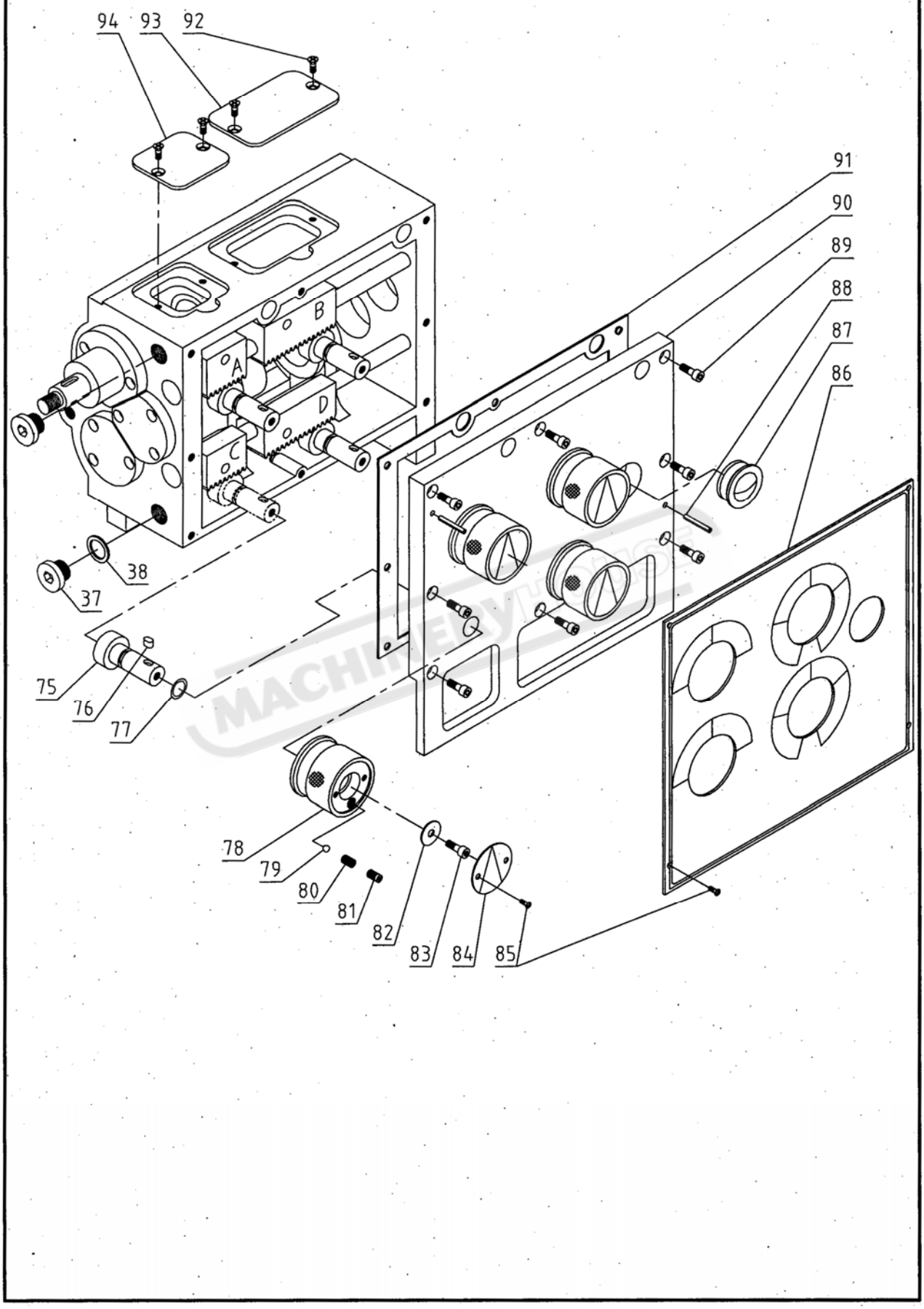

FEED GEAR BOX: PARTS LIST

№	Part №	Name	Specification
1	GB276	Radial thrust bearing	6203
2	D330B-31105	Space washer	
3	GB894.1	circlip	16
4	D330B-31201	gear	
5	D330B-31106	Space washer	
6	GB276	Radial thrust bearing	6202
7	D330B-31107	Space washer	
8	GB894.1	circlip	28
9	D330B-34201-3	gear	
10	D330B-34201-2	gear	
11	GB1096	key	A4×22
12	D330B-34201-1	gear	
13	GB894.1	circlip	20
14	D330C-0546C	Circle nut	
15	GB301	Thrust ball bearing	51105
16	GB70	Socket head screw	M5×14
17	D330B-31102-0	flange	
18	D330B-31103	gasket	
19	D330B-31101	shaft	
20	GB1096	key	5×45
21	D330B-30101	Casting case	
22	D330B-37103-0	gasket	
23	D330B-37102-0	bush	
24	GB70	Socket head screw	M6×14
25	D330B-37101-0	shaft	
26	D330B-32102	End cover	
27	D330B-32103	gasket	
28	GB1096	key	4×55
29	D330B-32101	shaft	
30	GB1096	key	4×80
31	D330B-35101	shaft	
32	GB1096	key	4×18
33	D330B-35103	gasket	
34	D330B-35102	End cover	
35	D330B-33102	End cover	
36	D330B-33103	gasket	
(37)		hexagonal socket head plug	M16×1.5
(38)		Copper washer	16
39	GB276	Radial thrust ball bearing	6004
40	D330B-36103	gasket	

MACHINERY HOUSE

FEED GEAR BOX: PARTS LIST

№	Part №	Name	Specification
41	D330B-36102	flange	
42	GB3871	Oil seal	SD25X40X7
43	D330B-36101	shaft	
44	D330B-32201	gear	
45	D330B-32202	gear	
46	D330B-32104	Space washer	
47	D330B-32203	gear	
48	D330B-32105	Space washer	
49	D330B-35106	Space washer	
50	D330B-35205	gear	
51	D330B-35105	Space washer	
52	D330B-35204	gear	
53	D330B-35203	gear	
55	D330B-35202	gear	
56	D330B-35104	Space washer	
57	D330B-35201	gear	
58	D330B-33101	shaft	
59	D330B-33201	gear	
60	D330B-36104	Space washer	
61	GB894.1	circlip	16
62	D330B-36201	gear	
63	D330B-38102	End cover	
64	D330B-38103	Rack-A	
65	D330B-38104	Shift fork-A	
66	D330B-38105	Rack-B	
67	D330B-38106	Shift fork-B	
68	D330B-38101	shaft	
69	D330B-38108	Shift fork-C	
70	D330B-38107	Rack-C	
71	D330B-38110	Shift fork-D	
72	D330B-38109	Rack-D	
73	GB78	screw	M5×8
74	GB1235	O-ring	12×1.9
75	D330B-38111	gear	
76	GB1096	key	5×8
77	GB1235	O-ring	16×2.4
78	D330A-3054	handle	
79	GB308	Steel ball	6

MACHINERY HOUSE

FEED GEAR BOX: PARTS LIST

№	Part №	Name	Specification
80	GB2089	spring	Y1-6×1×25
81	GB77	screw	M8×8
82	GB97.1	washer	6
83	GB70	Socket head screw	M6×12
84		Position sign	
85	GB818	screw	M4×6
86		Aluminum plate	
87	GB1160.1	Oil sight	A16
88	GB879	Spring pin	4×25
89	GB70	Socket head screw	M6×20
90	D330B-38112	cover	
91	D330B-38113	gasket	
92	GB819	screw	M4×6
93	D330B-38115	Cover-2	
94	D330B-38114	Cover-1	

MACHINERY HOUSE

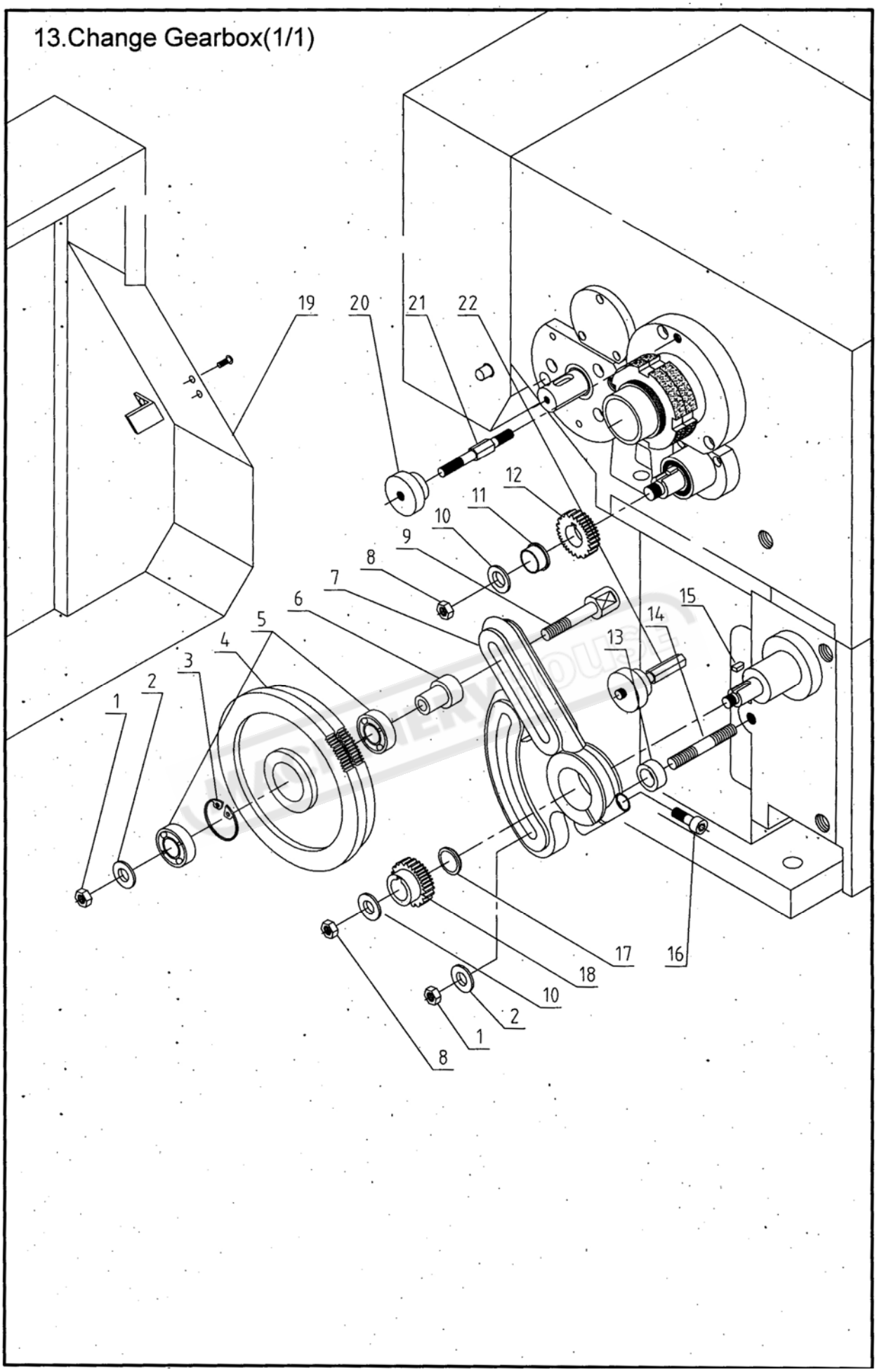
13.Change Gearbox(1/1)
19
20
21
22
12
11
10
9
8
7
6
5
4
3
2
1
15
14
13
17
16
18
10
2
1
8

CHANGE GEAR BOX: PARTS LIST

№	Part №	Name	Specification
1	GB6170	Hexagon nut	M10
2	GB97.1	washer	10
3	GB893.1	circlip	35
4	D330A-91208	gear	
5	GB276	Radial thrust ball bearing	6003-Z
6	D330B-91209G	collar	
7	D330B-91101G	Gear frame	
8	GB6170	Hexagon nut	M12
9	D330B-91210G	bolt	
10	GB97.1	washer	12
11	D330B-91213G-1	Space washer	
12	D330B-91201G	Change gear	
13	D330B-91214G	Space washer	
14	GB901	Double-screw bolt	M10×70
15	GB1096	Key	5×14
16			
17	D330B-91212G	Space washer	
18	D330B-91202G	Change gear	
21		Change gear set cover	
22	D330B-11216G	Circle nut	
23	D330B-11213G-1	Short double screw bolt	
24	D330B-11213G-2	Long double screw bolt	

MACHINERY HOUSE

14. Apron

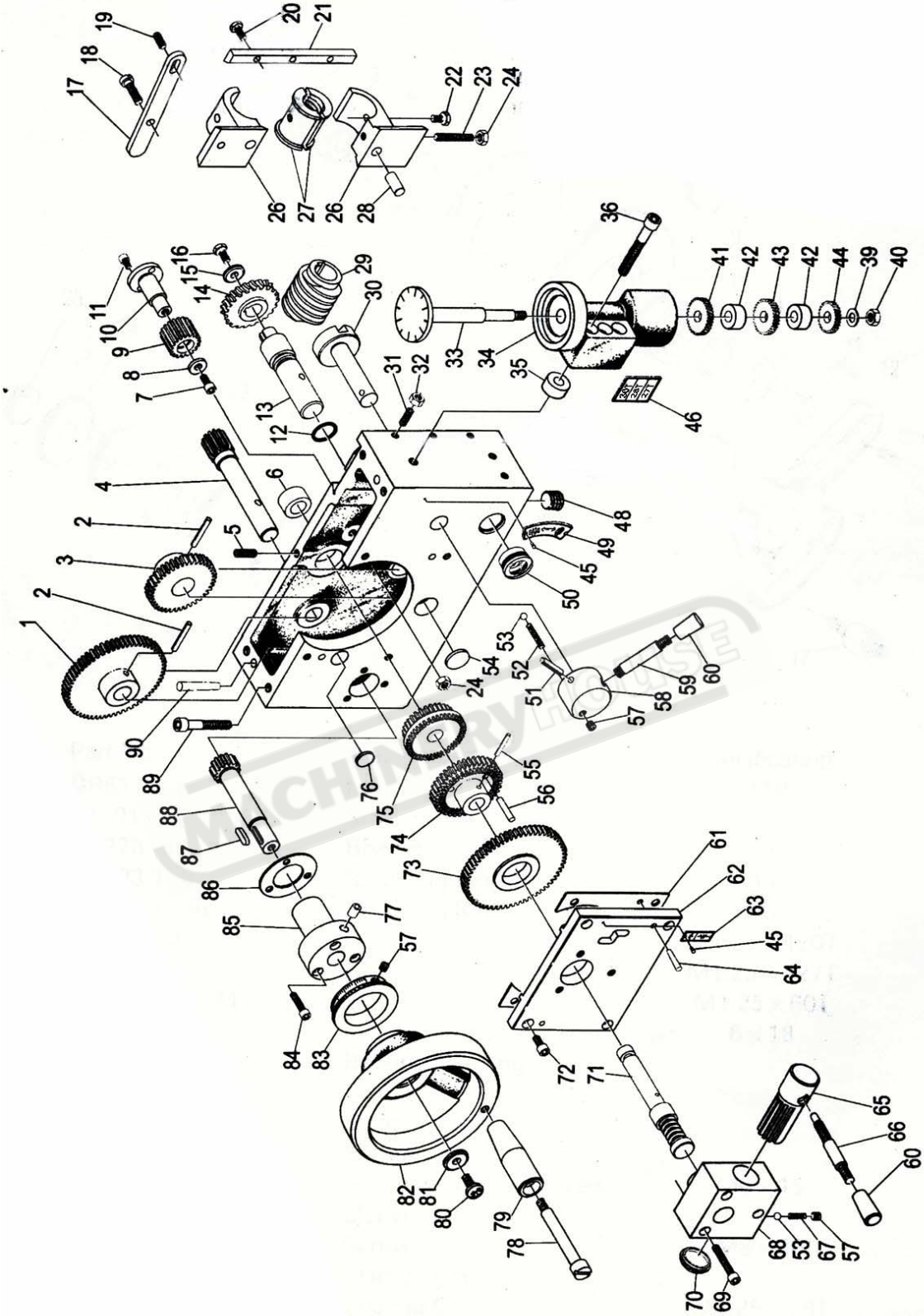
19
18
17
20
21
22
23
24
26
27
26
28
36
41
42
43
42
44
39
40
16
15
14
11
10
9
8
7
29
30
33
34
35
31
32
46
13
12
4
6
2
5
3
2
1
48
49
45
50
53
52
51
54
24
59
60
58
57
90
89
76
75
74
55
56
73
88
87
86
85
77
57
84
83
61
62
63
45
64
72
71
65
66
60
82
81
80
79
78
68
53
67
57
70
69

APRON: PARTS LIST

No.	Part No	Name	Specification
1	33-4012	Gear	M1.5×60T
2	GB879-86	Spring Pin	5×30
3	33-4024	Gear	M1.5×18T
4	33-4010	Pinion Shaft	M1.5×11T
5	GB79-85	Set Screw	M6×16
6	33-4049	Sleeve	
7	GB70-85	Socket Head Cap Screw	M6×12
8	32-06240	Washer	
9	32-06231	Gear	
10	32-06232	Idle Shaft	
11	GB70-85	Socket Head Cap Screw	M5×12
12	GB1255-76	O-Ring	
13	33-4026	Shaft	
14	32-06429	Worm Gear	
15	33-4028	Washer	
16	GB5783-86	Cap Screw	M6×12
17	33-4038	Interlock Piece	
18	GB6170-86	Pan Head Screw	M6×20
19	GB77-85	Socket Head Set Screw	M6×12
20	GB5783-86	Hexagon Head Screw	M5×20
21	33-4036	Gib	
22	GB5783-86	Hexagon Head Screw	M6×10
23	GB77-85	Socket Head Set Screw	M6×35
24	GB6170-85	Hexagon Nuts	M6
25	33-4040B	Dial Indicator(For Imperial Use)	
26	33-4035	Half Nut Base	
27	33-4035 1/2	Half Nut	
28	GB119-86	Pin	8×16
29	32-06228	Worm	
30	32-06225	Cam Shaft	
31	GB80-85	Socket Head Set Screw	M5×16
32	GB41-86	Hexagon Nut	M5
33	33-4040A	Dial Indicator(For Metric Use)	
34	33-4039A	Thread Dial Body(For Metric Use)	
35	32-06206	Washer	
36	GB70-85	Socket Head Cap Screw	M8×50
37	33-4039B	Thread Dial Body (For Imperial Use)	
38	33-4045A	Helical Gear	
39	GB95-85	Washer	8
40	GB41-86	Hexagon Nut	M8×50
41	33-4043	Helical Gear	
42	32-06237	Spacer	
43	33-4042	Helical Gear	
44	33-4041	Helical Gear	

MACHINERY HOUSE

APRON: PARTS LIST

No.	Part No	Name	Specification
45	GB827-86	Button Head River	2×5
46	33-4048	Helical Gear Chart	
47	33-4046	Indicator Table	
48	Q/ZG285.3	Drain Plug	1/8″
49	33-4050	Half Nut Indicator	
50	GB1160-89	Oil Sight Glass	A20
51	GB879-86	Spring Pin	5×35
52	GB2089-80	Compression Spring	
53	GB308-77	Steel Ball	
54	33-4027	Plug	
55	GB879-86	Spring Pin	3×25
56	GB119-85	Pin	C5×25
57	GB77-85	Socket Head Set Screw	M6×6
58	33-4033	Lever Handle	
59	33-4034	Lever	
60	GB1342-73	Knob	M8×40
61	33-4002-1	Spacer	
62	33-4002	Front Cover	
63	33-4047	Feed Direction Indicator	
64	GB117-86	Taper Pin	5×20
65	33-4020	Cam Shaft	
66	33-4022	Change Lever	
67	GB2089-80	Compression Spring	
68	33-4019	Bracket	
69	GB70-85	Socket Head Cap Screw	M6×35
70	CL6132-06-02	Plug	
71	33-4013	Shifting Shaft	
72	GB70-85	Socket Head Cap Screw	M6×16
73	33-4016	Clutch Gear	
74	33-4015	Clutch Gear	
75	33-4014	Clutch Gear	
76	33-4011	Plug	
77	GB1155-79	Ball Cap	
78	33-4008	Bolt	
79	33-4009	Handle	
80	GB818-85	Cross Recessed Head Screw	M6×15
81	33-4007	Washer	
82	33-4005	Handle Wheel	
83	33-4006	Dial	
84	GB70-85	Socket Head Cap Screw	M5×25
85	33-4004	Bracket	
86	33-4004-1	Spacer	
87	GB1096-79	Double Round Head Key	5×5×20
88	33-4003	Gear Shaft	
89	GB70-85	Socket Head Cap Screw	M8×30
90	GB117-85	Taper Pin	8×40

MACHINERY HOUSE

15. Cross slide Assembly(1/2-1)

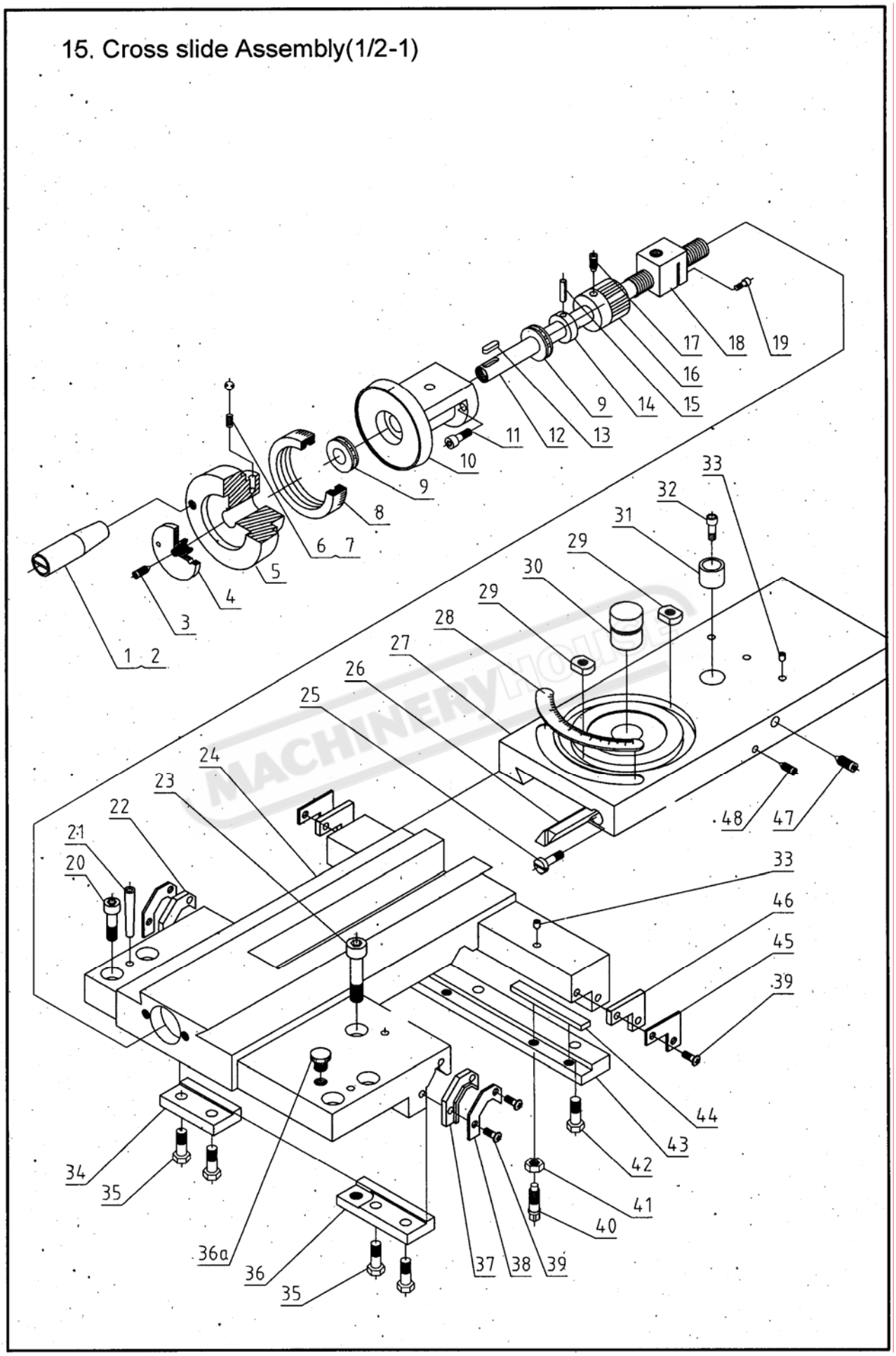

SADDLE & CROSS SLIDE (1/2-1): PARTS LIST

№	Part №	Name	Specification
1	D330A-81202	collar	
2	D330A-81203-2	screw	M10
3	GB78	screw	M6×25
4	D330B-51207G-1	Adjusting screw	
5	D330B-51207G	Handle wheel	
6	GB2089	spring	Y1-5×1×12
7	GB308	Steel ball	5
8	D330B-51208G	Index ring	
9	GB301	Thrust ball bearing	51102
10	D330B-51106G	bracket	
11	GB70	Socket head screw	M6×20
12	D330B-51206G	Cross leadscrew	Metric or inch
13	GB1096	key	5×8
14	D330A-51201	Space washer	
15	GB879	Spring pin	4×25
16	D330C-51202C	gear	
17	GB79	screw	M6×8
18	D330B-51401G	Copper nut	
19	GB70	Socket head screw	M6×16
20	GB70	Socket head screw	M10×30
21	GB118	Taper pin	6×45
22	D330A-51301	Left rubber wiper	
23	GB70	Socket head screw	M10×45
24	D330B-51101G	Saddle casting	
25	D330A-51214	Adjusting screw	
26	D330B-51212G	wedge	
27	D330B-51102G	Cross slide	
28		Staff guage	
29	D330B-51203G	Tailor-made nut	
30	D330B-51219G	Slide axis	4×80
31	D330B-51201G	washer	
32	GB70	Socket head screw	M8×16
33	GB1155	Oil cup	6
34	D330A-51103	Front strip	
35	GB5781	hexagon(al) head tap bolt	M8×20
36a	D330A-51215	Screw plug	
36	D330A-51105	strip	
37	D330A-51302	Right rubber wiper	
38	D330A-51205	plate	
39	GB818	Cup head screw	M5×12
40	GB83	Coach bolt	M8×25

MACHINERY HOUSE

SADDLE & CROSS SLIDE (1/2-1): PARTS LIST

№	Part №	Name	Specification
41	GB6170	Hexagon head nut	M8
42	GB5781	hexagon(al) head tap bolt	M8×25
43	D330A-51104	Back strip	
44	D330A-51216	wedge	
45	D330A-51204	plate	
46	D330A-51303	Back rubber wiper	
47	GB78	screw	M8×16
48	GB78	screw	M6×12

MACHINERYHOUSE

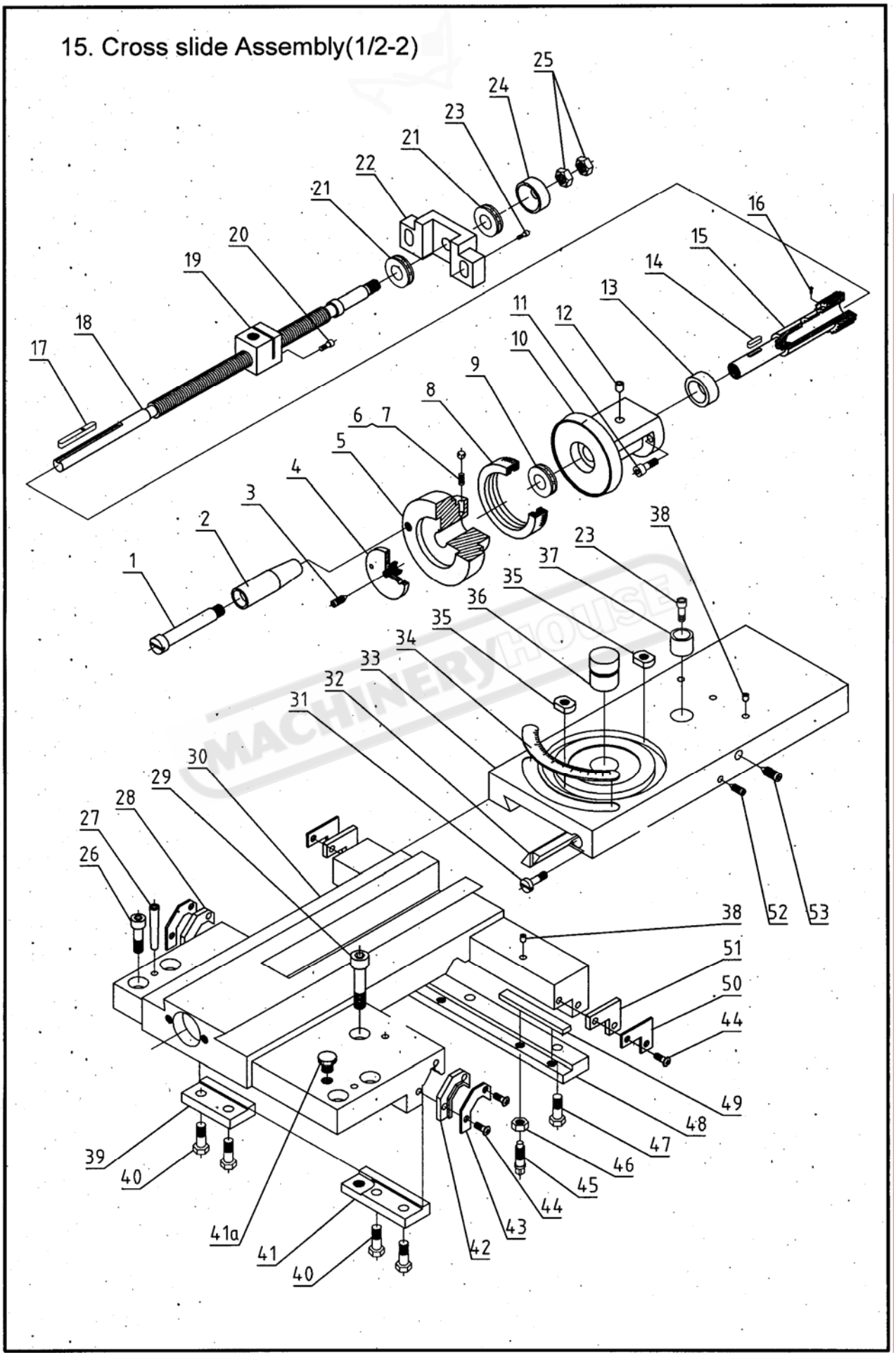
15. Cross slide Assembly(1/2-2)
25
24
23
21
22
21
20
19
18
17
16
15
14
13
12
11
10
9
8
6
7
5
4
3
2
1
38
23
37
35
36
35
34
33
32
31
30
29
28
27
26
38
52
53
51
50
44
49
48
47
46
45
44
43
42
41a
41
40
39
40

SADDLE & CROSS SLIDE (1/2-2): PARTS LIST

№	Part №	Name	Specification
1	D330A-81202	collar	
2	D330A-81203-2	screw	M10
3	GB78	screw	M6×25
4	D330B-51207G-1	Adjusting screw	
5	D330B-51207G	Handle wheel	
6	GB2089	spring	Y1-5×1×12
7	GB308	Steel ball	5
8	D330B-51208G	Index ring	
9	GB301	Thrust ball bearing	51102
10	D330B-51106G	bracket	
11	GB70	Socket head screw	M6×20
12	GB1155	Oil cup	8
13	D330B-F4003	Space washer	
14	GB1096	key	4×16
15	D330B-F4004	Connecting shaft	
16	GB819	screw	M3×4
17	D330B-F4008	Tailor-made key	
18	D330B-F4005	Cross leadscrew	Metric or inch
19	D330B-51401G	Copper nut	Metric or inch
20	GB70	Socket head screw	M6×16
21	GB301	Thrust ball bearing	51101
22	D330B-F4006	Back bracket	
23	GB70	Socket head screw	M8×16
24	D330B-F4007	cover	
25	GB6170	Hexagon nut	M10
26	GB70	Socket head screw	M10×30
27	GB118	Taper pin	6×45
28	D330A-51301	Left rubber wiper	
29	GB70	Socket head screw	M10×45
30	D330B-51101G	Saddle casting	
31	D330A-51214	Adjusting screw	
32	D330B-51212G	wedge	
33	D330B-51102G	Cross slide	
34		Staff guage	
35	D330B-51203G	Tailor-made nut	
36	D330B-51219G	Slide axis	
37	D330B-51201G	washer	
38	GB1155	Oil cup	6
39	D330A-51103	Front strip	
40	GB5781	hexagon(al) head tap bolt	M8×20
41a	D330A-51215	Screw plug	
41	D330A-51105	strip	
42	D330A-51302	Right rubber wiper	
43	D330A-51205	plate	

MACHINERY HOUSE

SADDLE & CROSS SLIDE (1/2-2): PARTS LIST

№	Part №	Name	Specification
44	GB818	Cup head screw	M5×12
45	GB83	Coach bolt	M8×25
46	GB6170	Hexagon head nut	M8
47	GB5781	hexagon(al) head tap bolt	M8×25
48	D330A-51104	Back strip	
49	D330A-51216	wedge	
50	D330A-51204	plate	
51	D330A-51303	Back rubber wiper	
52	GB78	screw	M6×12
53	GB78	screw	M8×16

MACHINERY HOUSE

15. Cross slide Assembly(2/2)

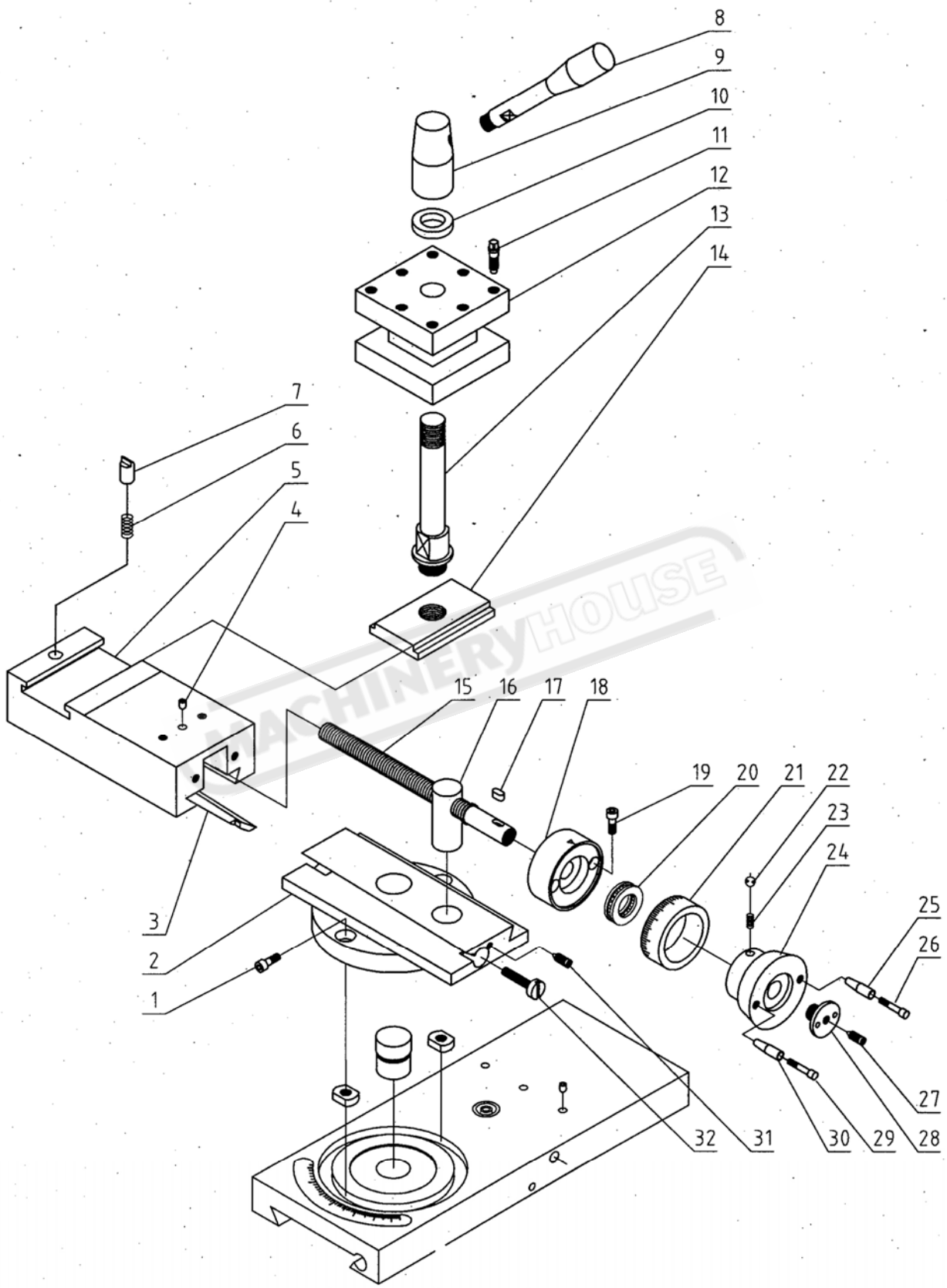

SQUARE TOOL POST（2/2）: PARTS LIST

№	Part №	Name	Specification
1	GB70	Socket head screw	M8×16
2		Swivel slide	
3		wedge	
4	GB1155	Oil cup	6
5		gib	
6	GB2089	spring	Y1-8×1×11
7		wiper	
8		handle	
9		Handle base	
10		washer	
11	GB83	Coach bolt	M10×50
12		Tool post	
13		shaft	
14		plate	
15		leadscrew	Metric or inch
16		nut	
17	GB1096	key	4×14
18		bracket	
19	GB70	Socket head screw	M6×16
20	GB301	Thrust ball bearing	51103
21		Index ring	
22	GB2089	spring	Y1-5×1×12
23	GB308	Steel ball	5
24		Handle wheel	
25		collar	
26		bolt	
27	GB78	screw	M6×25
28		Adjusting screw	
29		bolt	
30		collar	
31	GB80	screw	M6×16
32		Adjusting bolt	

MACHINERY HOUSE

16. Tailstock Assembly(1/1)

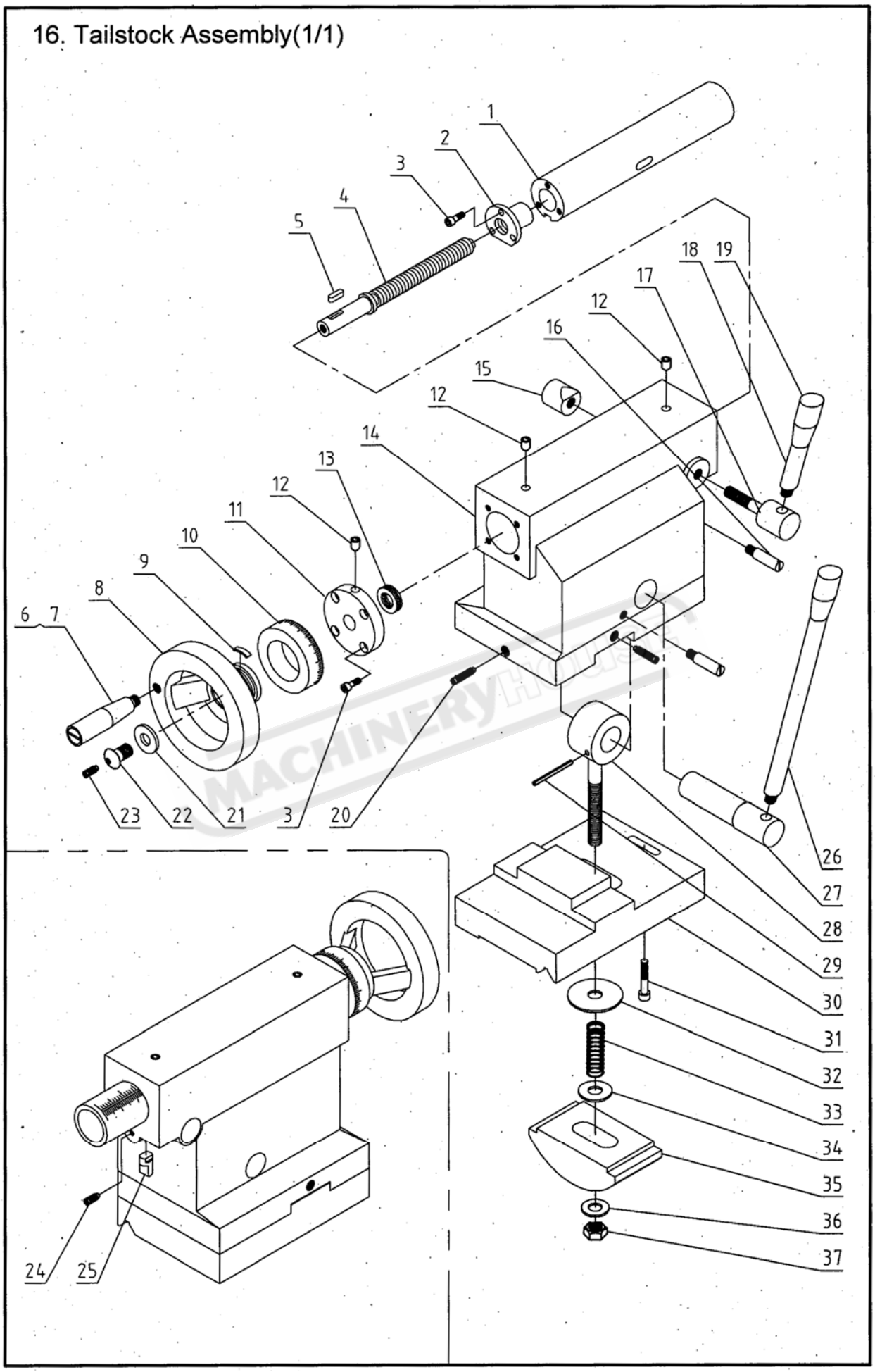

TAILSTOCK: PARTS LIST

№	Part №	Name	Specification
1		sleeve	
2		Copper nut	Metric:4mm or inch:10TPI
3	GB70	Socket head screw	M5×12
4		leadscrew	Metric:4mm or inch:10TPI
5	GB1096	key	4×15
6	D330A-81202	collar	
7	D330A-81203-1	bolt	M8
8		Handle wheel	
9		Spring reed	
10	D330A-6010	Index ring	
11		End cover	
12	GB1155	Oil cup	8
13	GB301	Thrust ball bearing	51102
14		Tailstock casting	
15		Lock block	
16		pin	
17		shaft	
18		handle	
19	JB1342	cover	M8x40
20	GB79	screw	M12×45
21	GB97.1	washer	12
22		Adjusting screw	
23	GB78	screw	M6×25
24	GB79	screw	M6×8
25		pin	
26		handle	
27		eccentricity shaft	
28		Draw-in bolt	
29	GB879	Spring pin	4×50
30		base	
31	GB70	Socket head screw	M6x40
32	D330A-6042	Tailor-made washer	
33		spring	
34	D330A-6043	Tailor-made washer	
35		Clamp plate	
36	GB97.1	washer	16
37	GB6170	Hexagon nut	M16

MACHINERY HOUSE

17. Steady & Follow Rest

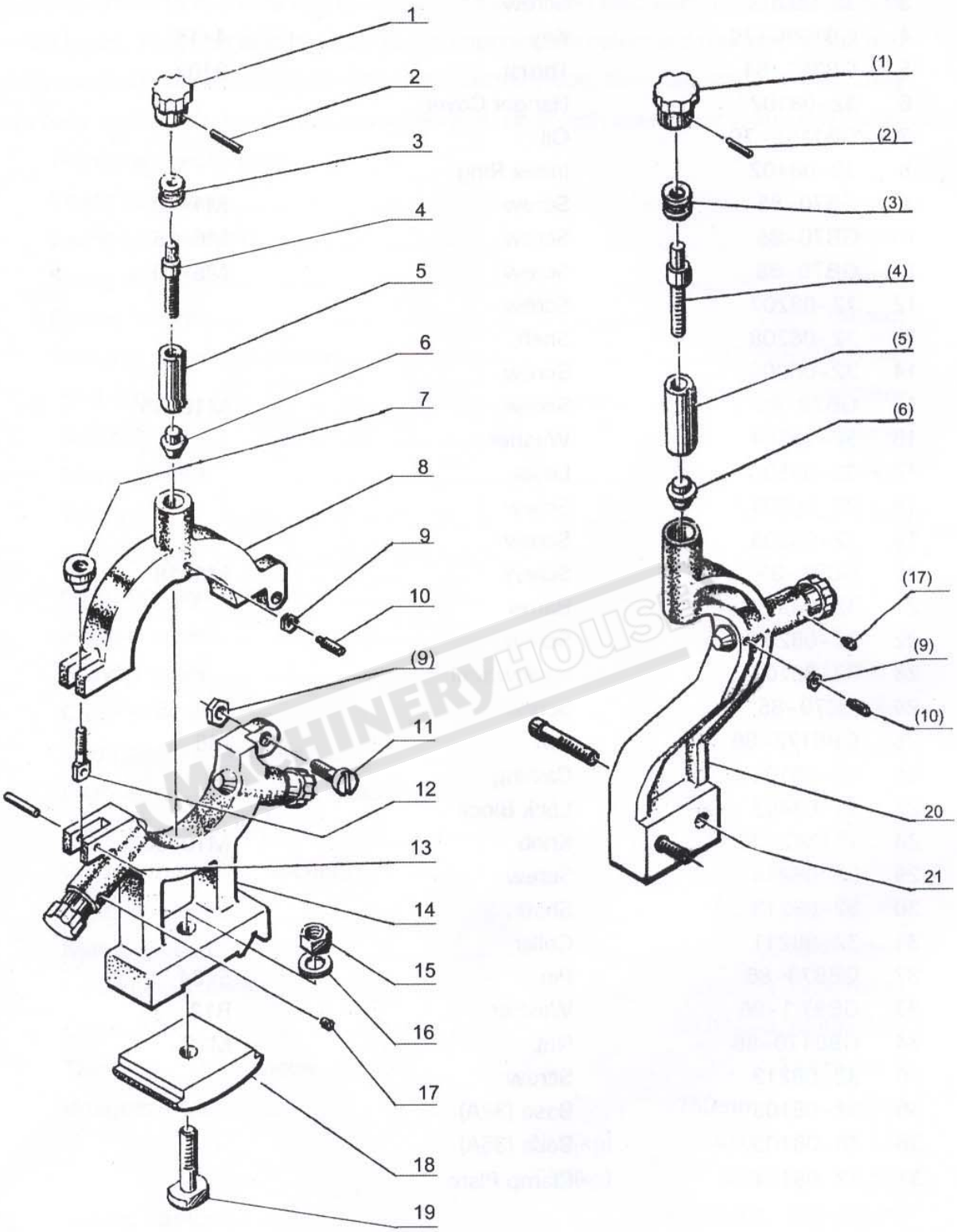

STEADY & FOLLOW REST: PARTS LIST

No.	Part No	Name	Specification
1	JB1360-76	KNOB	M32X8
2	GB119-86	PIN	3X18
3	3210203	COLLAR	
4	32-10204	SCREW	
5	32-10201	COLLAR	
6	32-10401	CLAPPING HEAD	
7	32-10205	NUT	
8	32-10101	UPSIDE OF CENTER REST	
9	GB6170-86	NUT	M6
10	GB79-85	SCREW	M6X18
11	GB65-85	SCREW	M6X30
12	32-10206	SCREW	
13	GB87986	PIN	5X24
14	32-10102	DOWNSIDE OF CENTER REST	
15	GB6170-86	NUT	M12
16	GB97.1-86	WASHER	12
17	GB78-85	SCREW	M6X6
18	32-10103	CLAMP	
19	GB37-85	SCREW	M12X65
20	3210104	FOLLOW REST	
21	GB70-85	SCREW	M8X46

MACHINERY HOUSE

18.Coolant system & Work light(1/1)

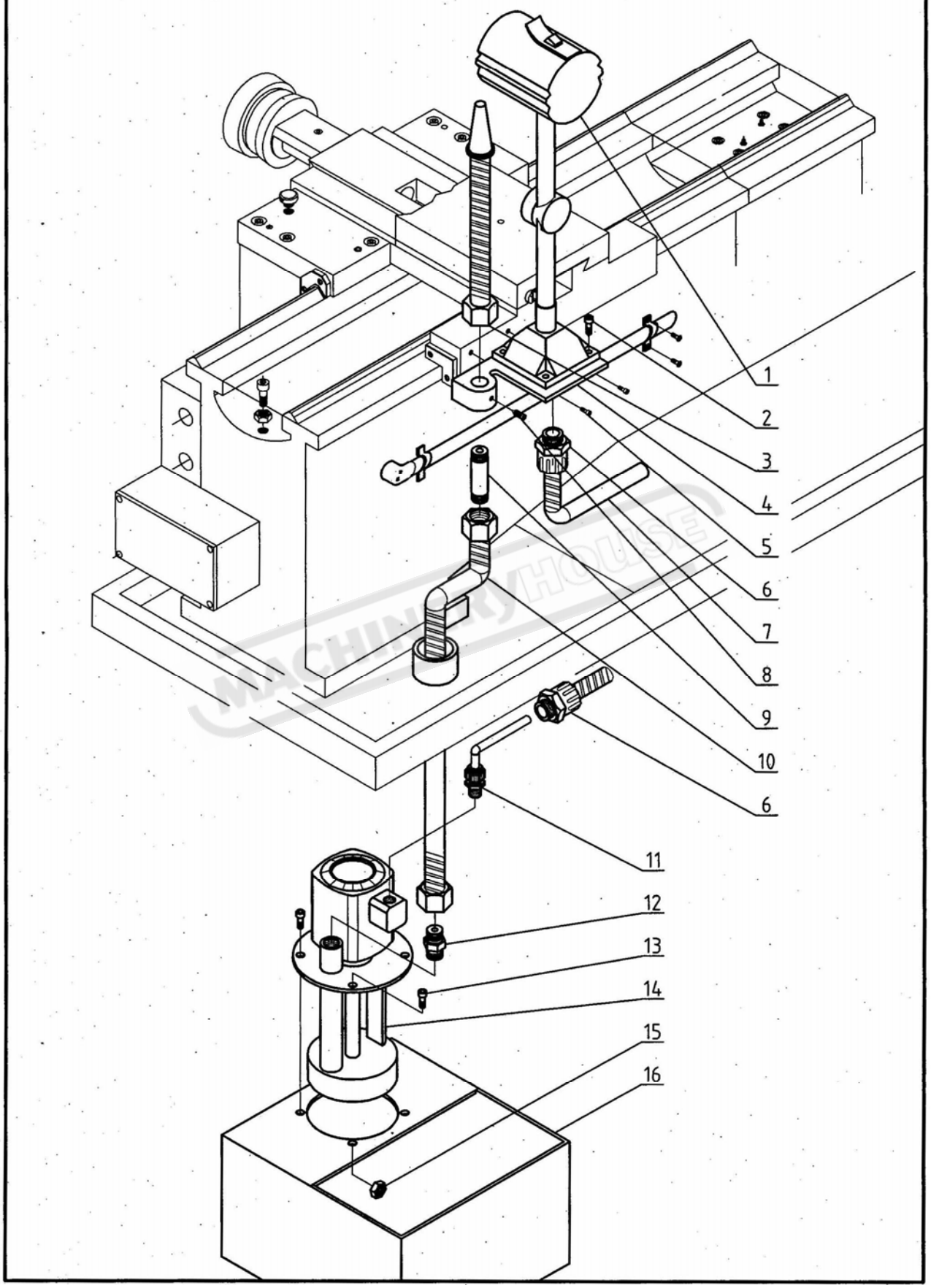

COOLANT SYSTEM: PARTS LIST

No.	Part No	Name	Specification
1	32-15201	Work light	
2	GB70	Socket head screw	M5×12
3		Liquid nozzle	
4	D330A-71206-2	bracket	
5	GB70	Socket head screw	M6×16
6		Lock connecting	M20×1.5
7		Plastic tube	
8	GB78	screw	M6×12
9	D330A-92202	pipe	
10		Metal cooling tube	
11		Lock connecting	M12×1
12	D330A-92203	connecting	
13	GB70	Socket head screw	M5×12
14	AB-12	pump	
15	GB6170	Hexagon nut	M5
16	D330B-14401	Water tank	

MACHINERY HOUSE

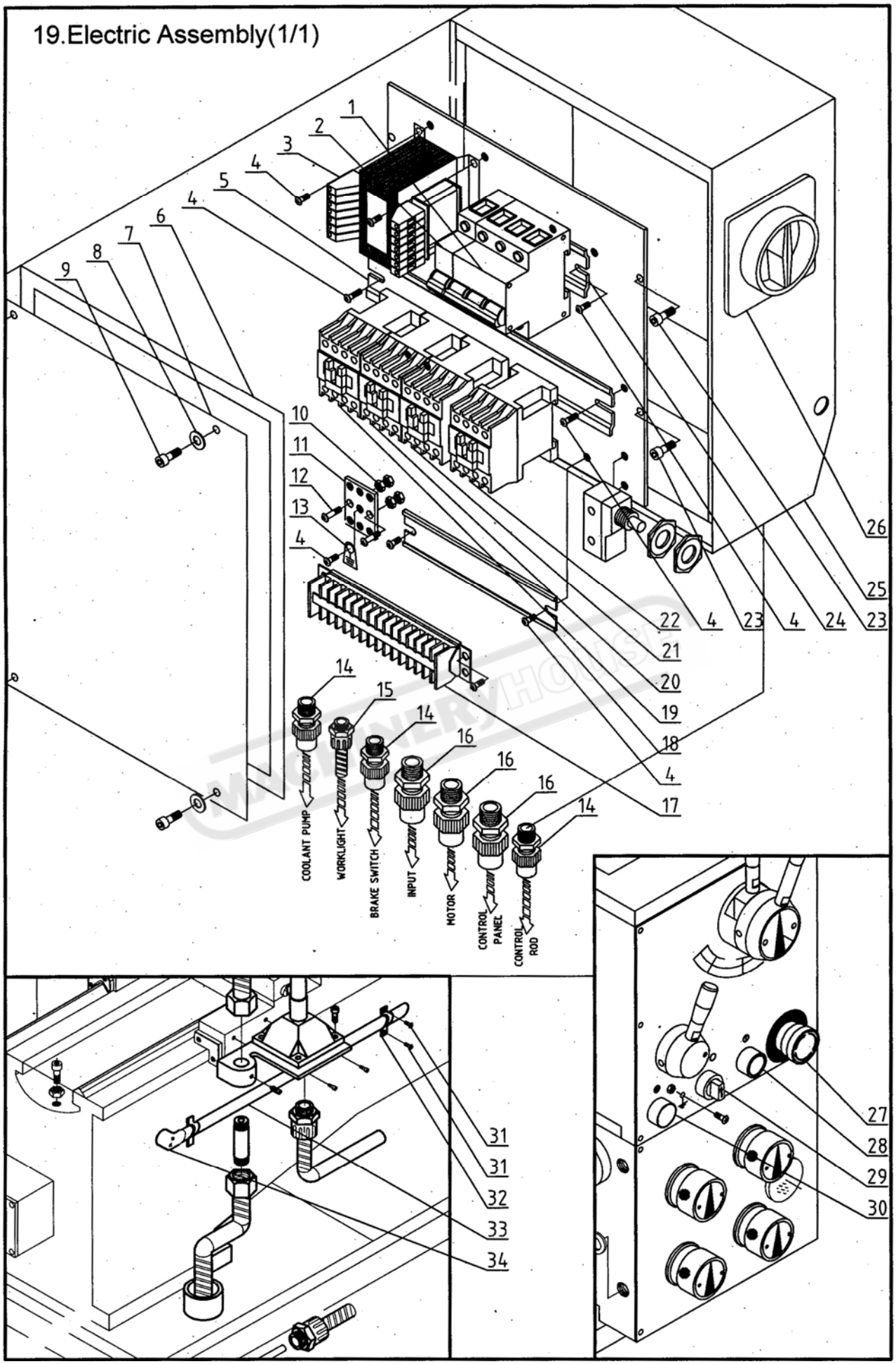
19.Electric Assembly(1/1)
1
2
3
4
5
6
7
8
9
10
11
12
13
14
15
16
17
18
19
20
21
22
23
24
25
26
27
28
29
30
31
32
33
34
COOLANT PUMP
WORKLIGHT
BRAKE SWITCH
INPUT
MOTOR
CONTROL PANEL
CONTROL ROD

ELECTRIC ASSEMBLY: PARTS LIST

No.	Part No	Code	Name	Specification
1	GB10963.1	QF1	Protective circuit breaker	DZ47-60 6A C 3P (used in 3ph)
			Protective circuit breaker	DZ47-60 16A C 2P (used in 1ph)
2	GB10963.1	QF2	Protective circuit breaker	DZ47-60 2A C 1P (used in coolant)
3	Q/CY080	TC	transformer	JBK5-63VA or JBK5-100VA
4	GB818		screw	M4×6
5			Fixing rail clip	
6			Rubber cushing	
7			cover	
8	GB97.1		washer	4
9	GB70		Socket head screw	M4×10
10	GB6170		nut	M5
11			Sheet Copper	
12	GB818		screw	M4×12
13			Earth sign plate	
14			Locker connecting	M16×1.5
15			Iron locker connecting	M20×1.5
16			Locker connecting	M20×1.5
17			Junction box	
18			Fixing rail clip	
19	GB14048.4	KM1	AC contactor	CJX2-1021 or CJX2-2501 24V
20	GB14048.4	KM2	AC contactor	CJX2-1201 or CJX2-2501 24V
21	GB14048.4	KM3	AC contactor	CJX2-1021 24V
22	GB14048.4	KA	Contactor relay	JZC4-40 24V
23	GB70		Socket head screw	M5×12
24			Fixing rail clip	
25			Electric box	
26			Power switch	
27	GB14048.5			ZB2-BE102C
28	GB14048.5		Fast-stop knob	ZB2-BE101C
29	GB14048.5		Button switch	LAY3-11X/2 380V
30	GB14048.5		Indication light	AD62-22D/S 24V white
31	GB818		screw	M5×10
32			Hemicycle clip	C-16
33			PVC tube	Φ16×1200
34			Elbow connecting	

MACHINERY HOUSE

Optional accessories

------CE safety protecting for chuck & change gears

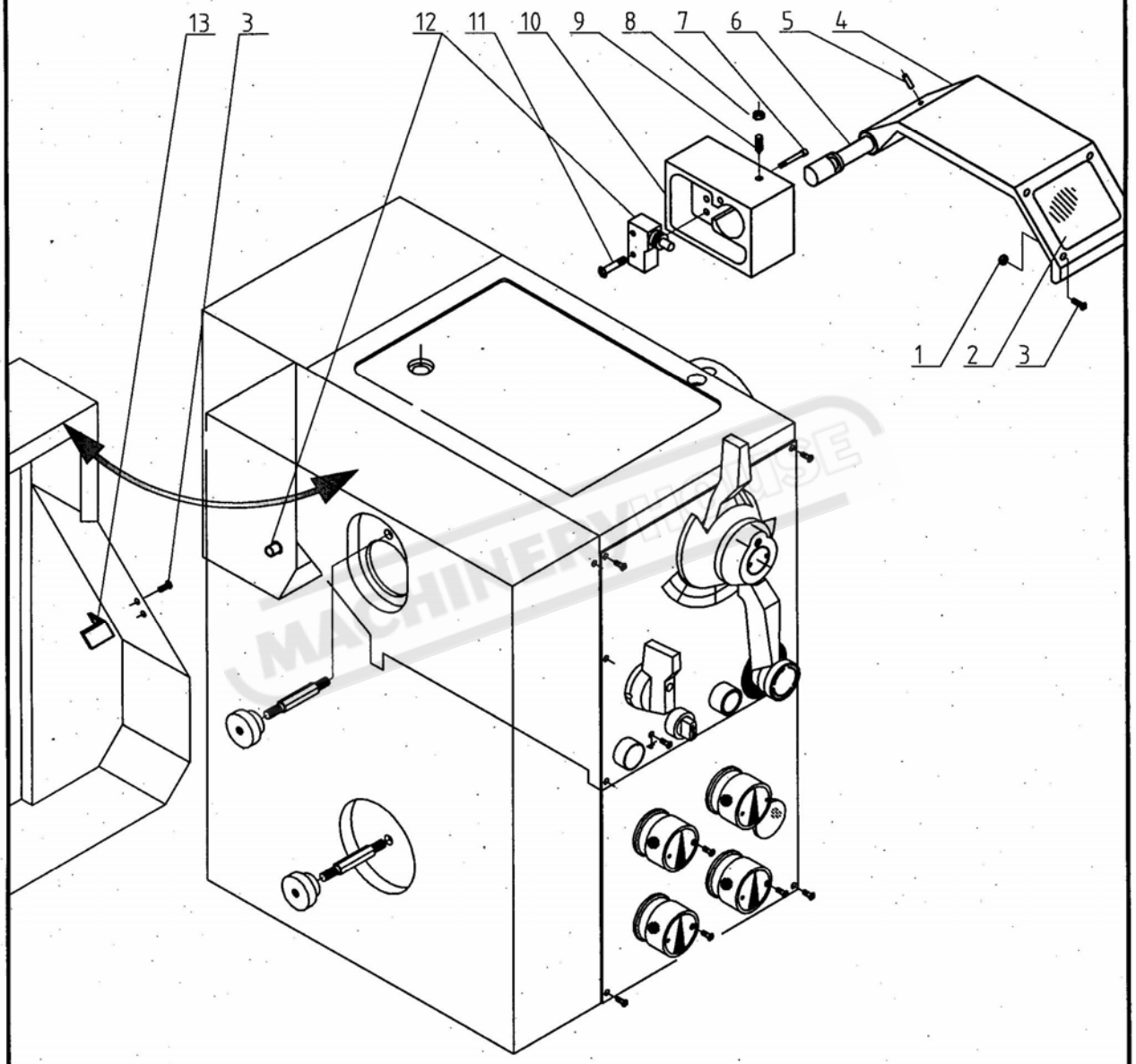

CE SAFETY PROTECTING FOR CHUCK & CHANGE GEARS: PARTS LIST

No.	Part No	Name	Specification
1	GB6170	nut	M4
2	D330A-71204-1	Protecting glass	
3	GB818	screw	M4×10
4	D330A-71204	Iron cover	
5	GB879	Spring pin	4×25
6	D330A-71203	shaft	
7	GB70	Socket head screw	M6×45
8	GB6170	nut	M6
9	GB79	screw	M6×16
10	D330A-71101	Casting box	
11	GB818	screw	M4×25
12		switch	
13	D330A-71208	Baffle-iron	

MACHINERYHOUSE

Optional accessories
------Leadscrew guard

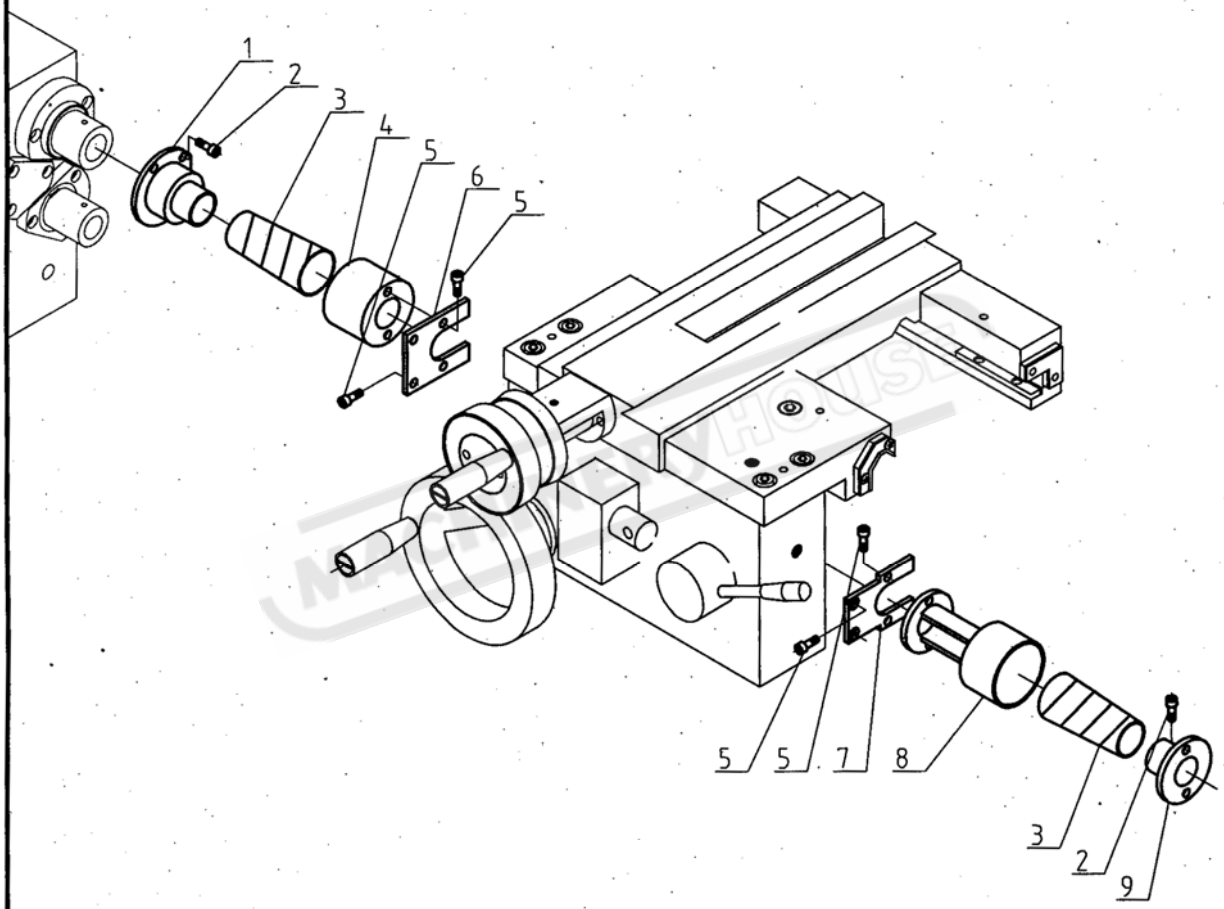

LEADSCREW GUARD： PARTS LIST

No.	Part No	Name	Specification
1	D330B-1030G	bracket	
2	GB70	Socket head screw	M5×10
3	D330-F3001	Spring cover	
4	D330A-1034	Left bracket	
5	GB70	Socket head screw	M6×12
6	D330A-1032	Left bracket	
7	D330A-1033	Right bracket	
8	D330B-1029G	Right bracket	
9	D330A-1031	bracket	

MACHINERY HOUSE

Optional accessories
------Safety clutch for feed rod

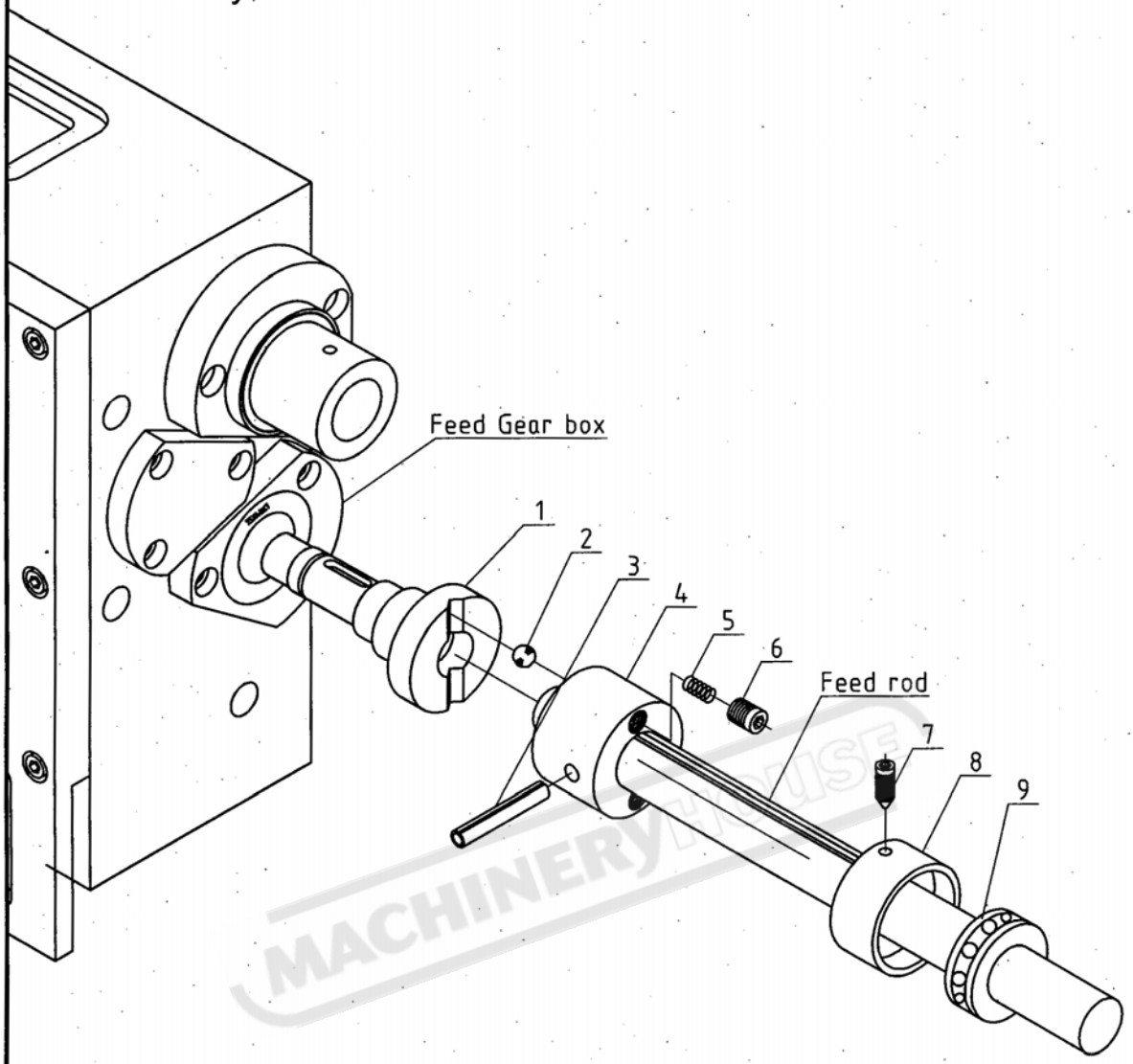

MACHINERY HOUSE

SAFETY CLUTCH FOR FEED ROD：PARTS LIST

No.	Part No	Name	Specification
1	D330B-36101-01	shaft	
2	GB308	Steel ball	6
3	GB879	Spring pin	4×42
4	D330B-36101-02	clutch	
5	GB1358	spring	Y1-6×1×25
6	GB77	screw	M8×8
7	GB78	screw	M6×10
8	D330B-CS004	cover	
9	GB301	bearing	51104

MACHINERY HOUSE

Optional accessories
------Simple safety protecting glass

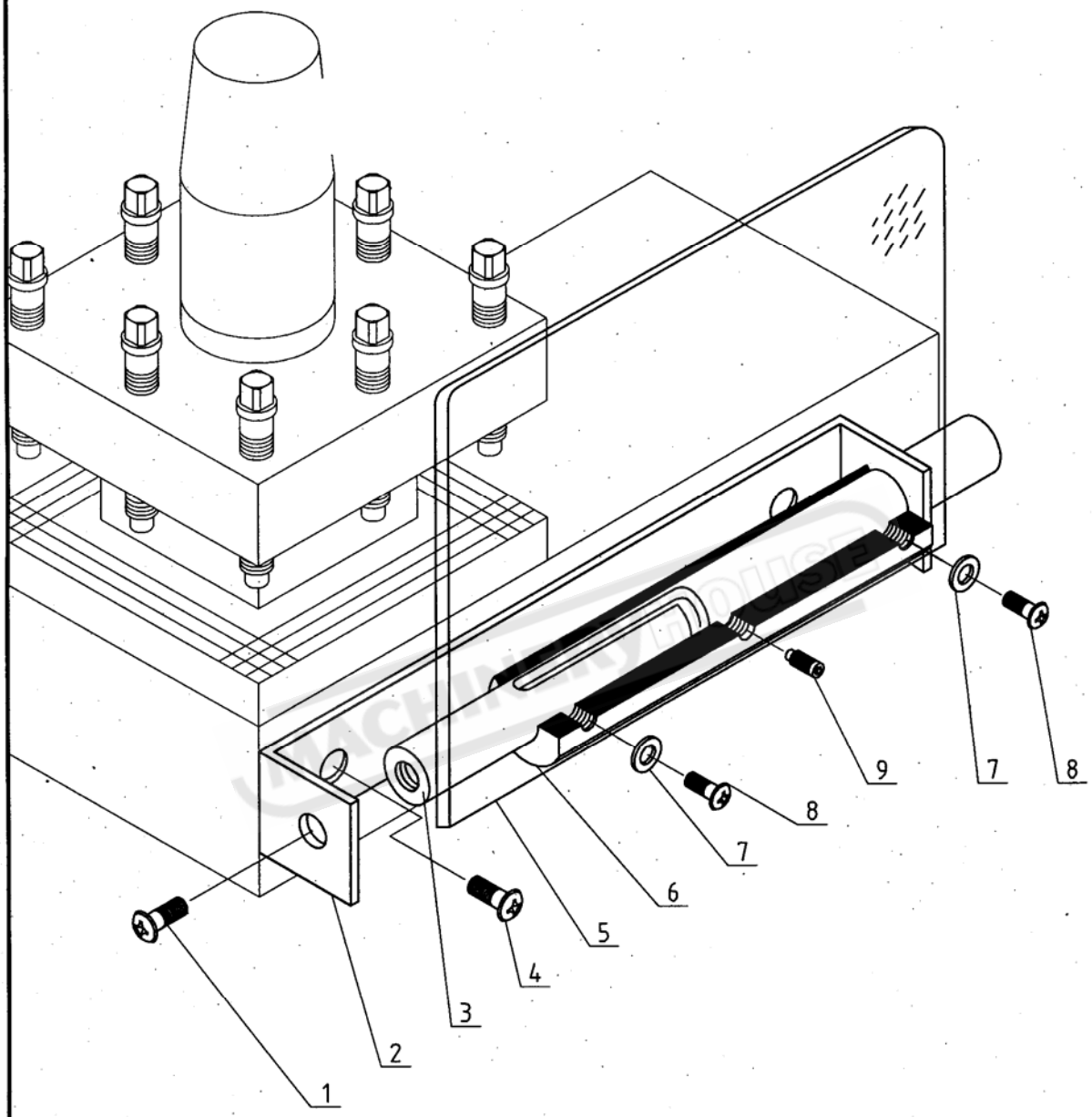

SIMPLE SAFETY PROTECTING GLASS PARTS LIST

No.	Part No	Name	Specification
1	GB818	screw	M6×8
2	F1001	Iron bracket	
3	F1002	shaft	
4	GB818	screw	M5×8
5	F1004	Protecting glass	
6	F1003	Oriented sleeve	
7	GB97.1	washer	4
8	GB818	screw	M4×8
9	GB79	screw	M5×10

MACHINERY HOUSE

Optional accessories
------Demarcation framework for longitudinal travel

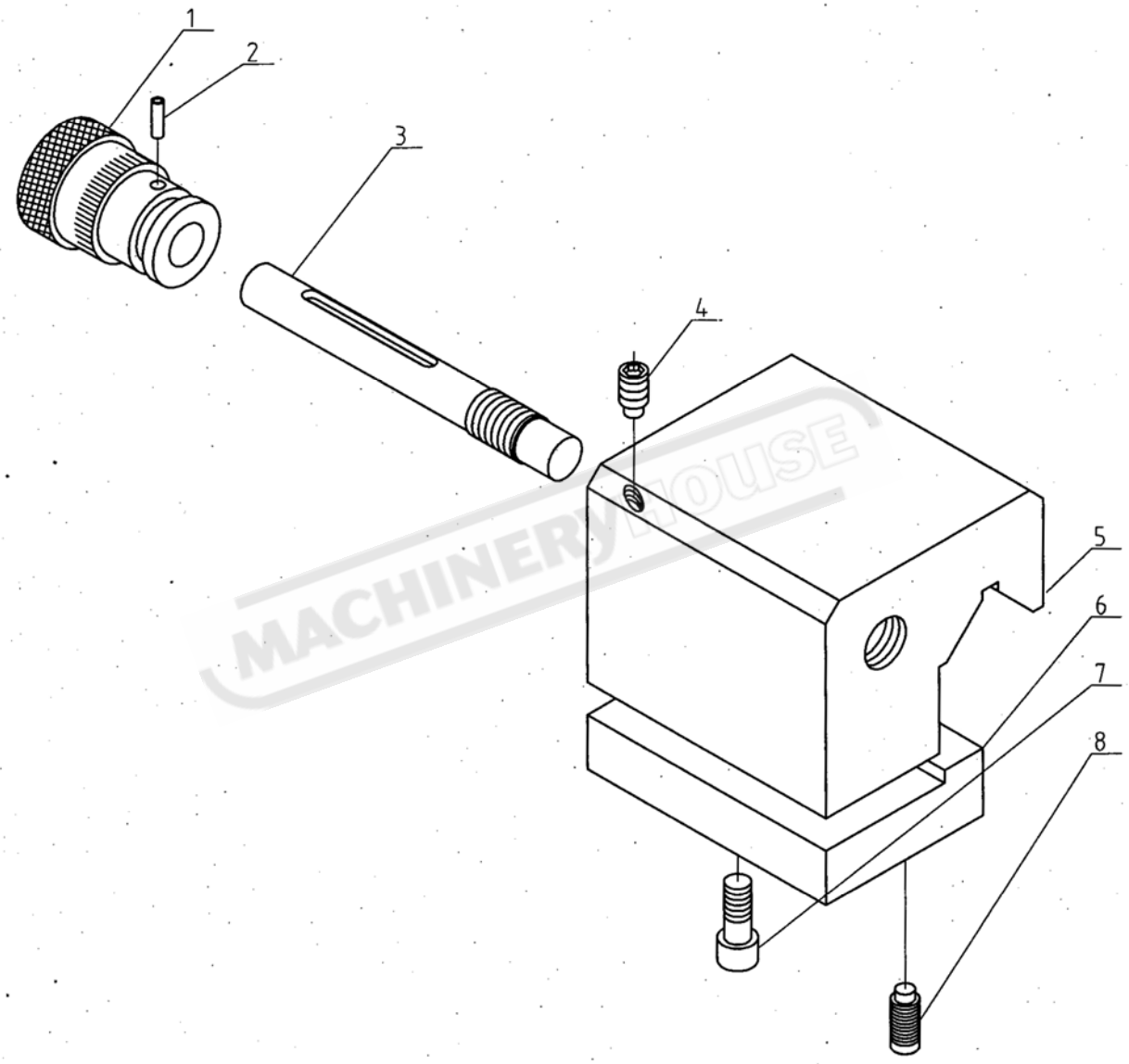

MACHINERY HOUSE

DEMARCATION FRAMEWORK PARTS LIST

No.	Part No	Name	Specification
1	DC003	Index ring	
2	GB879	Spring pin	3×6
3	DC004	shaft	
4	GB79	screw	M6×10
5	DC001	Casting body	
6	DC002	plate	
7	GB70	Socket head screw	
8	GB79	screw	M5×16

MACHINERY HOUSE